SKF

SKF four-row taper roller bearings set new performance standards

Now with the new
SKF Explorer bearings



Contents

The SKF brand now stands for more than ever before, and means more to you as a valued customer.

While SKF maintains its leadership as the hallmark of quality bearings throughout the world, new dimensions in technical advances, product support and services have evolved SKF into a truly solutions-oriented supplier, creating greater value for customers.

These solutions encompass ways to bring greater productivity to customers, not only with breakthrough application-specific products, but also through leading-edge design simulation tools and consultancy services, plant asset efficiency maintenance programs, and the industry's most advanced supply management techniques.

The SKF brand still stands for the very best in rolling bearings, but it now stands for much more.

SKF – The knowledge engineering company



1 Product information 3

Quality and choice 3
Why four-row taper roller bearings? 3
Why four-row taper roller bearings from SKF? 3
Unique design features 4
SKF Explorer bearings – a quantum leap forwards ... 6
Proven bearing arrangements 8

2 Recommendations 10

Aplication advices 10
Design of bearing arrangements 10
Lubrication 11
Mounting 12
Monitoring the bearings in operation 13
Dismounting 14
Disassembling SKF Explorer inner rings and cage and roller assemblies 14
Reassembling SKF Explorer inner rings and cage and roller assemblies 15
Bearing storage 15

3 Product data 16

General bearing data 16
Designs 16
Design identification 18
SKF Explorer class bearings 19
Dimensions 19
Tolerances 19
Internal clearance 19
Influence of operating temperature on bearing material 19
Minimum load 19
Equivalent dynamic bearing load 19
Equivalent static bearing load 19
Comparative load ratings 20
Designations and suffixes 20
Product table 22

Other SKF products 34

CR radial shaft seals and V-ring seals 34
CR repair sleeves 35
SKF lubricating greases 36

SKF – The knowledge engineering company 38

Quality and choice

Why four-row taper roller bearings?

Four-row taper roller bearings are used successfully worldwide for rolling mill bearing arrangements, particularly as work and back-up roll bearings for hot as well as cold rolling mills. As they can support both heavy radial loads and simultaneously acting axial loads they permit simple and cost effective roll neck bearing arrangements.

Specific features of these SKF bearings are, among others,

- logarithmic contact profile between rollers and raceways provides a more favourable stress distribution in the bearing and considerably enhances operational reliability,
- special roller end/flange contact geometry designed to promote lubrication and minimise friction and, of course,
- quality of SKF manufacture.

However, the technical development of SKF four-row taper roller bearings has been driven yet further. The result – the SKF Explorer four-row taper roller bearings – sets a completely new performance standard.

To appreciate the excellent features and benefits of SKF Explorer bearings, read more about them on the following pages.

Why four-row taper roller bearings from SKF?

SKF is long acquainted with the use of rolling bearings in rolling mills. As early as 1922 SKF introduced roller bearings as roll neck bearings in the SKF steelworks Hofors Bruk. Since then both builders and operators of rolling mills have benefitted from innovative SKF bearing technology.

SKF four-row taper roller bearings are available in a wide range of sizes and designs appropriate to the application. These include

- TQO and TQI configuration (face-to-face or back-to-back arangement),
- sealed and open bearings,
- bearings with or without extended inner rings,
- bearings with cylindrical or tapered bore,
- bearings with and without spacer rings.



Unique design features

Even load distribution under normal loads; extended roller/raceway contacts, i.e. lower stresses

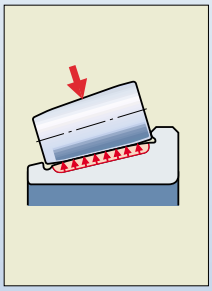

Improved stress distribution due to reduced edge stresses under heavy loads and also when misaligned, i.e. much higher operational reliability.

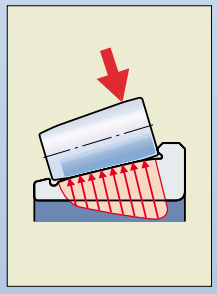

Improved roller end/flange contact, i.e. optimized lubrication, minimized friction

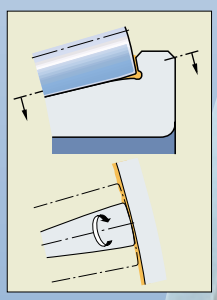

The C design of the seal leaves space for rollers that are almost as long as those of open bearings so that the load carrying capacity is almost equal.



Bearings without spacer rings are simpler to mount and the load distribution is better



SKF taper roller bearings are state-of-the-art products. This was particularly true for the contact conditions in standard bearings, but is even more so for the SKF Explorer bearings.

Favourable stress distribution
The contact geometry between the rollers and raceways has been much improved by the use of logarithmic contact profile geometry resulting in optimized stress distribution in the bearing under all conditions of load and misalignment.

Efficient lubrication
The superior logarithmic contact profile and the optimized raceway surfaces of the rings and rollers not only improve lubrication conditions but are also less demanding of the lubricant.

Efficient lubrication of the flange
The special form of the surfaces of the inner ring guide flanges and the large ends of the rollers considerably enhance lubricant film formation in the sliding roller end/flange contacts.

Well-designed seals
The radial shaft seals of SKF four-row taper roller bearings have the form of a C and extend over the cages of the two outboard roller and cage assemblies. Because of the compact design the bearing can incorporate rollers of the same, or almost the same length as the open bearing of the same dimensions so that the load carrying capacity is the same or very similar.

A stainless steel garter spring enables the sealing lip to exert the requisite pressure. The seals are thermally and chemically stable and can operate at high sliding velocities.

O-rings inserted in grooves in the outer ring outside surface prevent dirt and water from penetrating between the outer rings and the chock bore, from where it can contaminate the bearing and cause corrosion.

Spacer rings – if needed
Even though most of the bearings in the SKF range of four-row taper roller bearings are now made without spacer rings, bearings with spacer rings are available for applications where they are needed.

Better: without spacer rings
Bearings without spacer rings are generally the better engineering solution and have two main advantages:

- They comprise fewer component parts and can thus be mounted more easily and quickly.
- Four separate outer rings contribute to a more even load distribution and consequently, a longer service life.

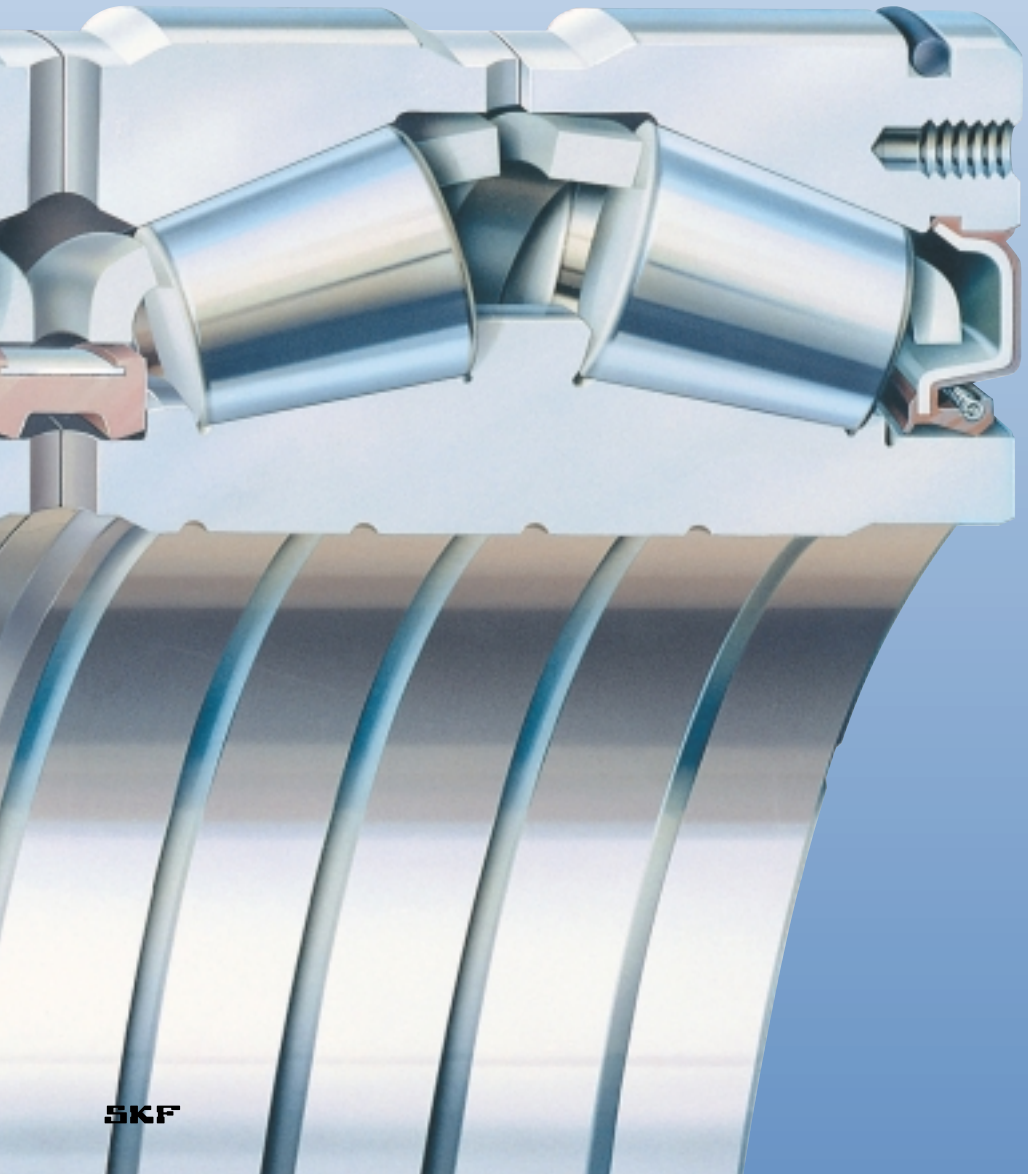

SKF Explorer bearings – a quantum leap forwards

SKF Explorer bearings are made of extremely clean steel.

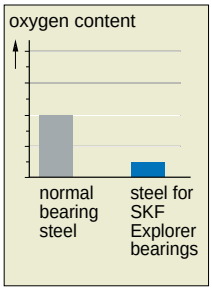

Modified cage pocket design improves lubrication.



The new seal made of environmentally friendly material seals more efficiently against the rotating inner ring.

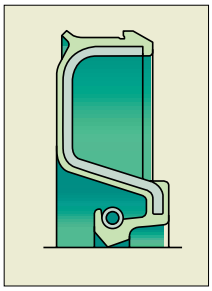

The cage and roller assemblies can be separated from the inner rings – no special tools are required.



The maintenance-friendly seals are easy to remove and reinstall.



The performance of the previous standard taper roller bearings has confirmed the benefits of the improved roller/raceway geometry and the optimized roller end/flange contact. In addition the new SKF Explorer performance class four-row taper roller bearings meet important customer demands and are characterized by

- higher load carrying capacity,
- longer service life,
- unique inspection/maintenance capabilities,
- improved seals.

Higher load carrying capacity
The steel used for SKF Explorer bearings has high purity and extreme low oxygen content. The reduction in the number of inclusions increases the fatigue strength as well as the wear resistance and enhances the ability to support heavy and shock loads and increases the dynamic load carrying ability.

Longer service life
Increased dynamic load carrying capacity implies longer service life and this is reinforced and extended by the benefits derived from

- a further refinement of the contact geometry,
- an increase in flange strength,
- an increase in manufacturing quality.

A new heat treatment process provides an excellent balance between material hardness and toughness. The high surface hardness increases wear resistance, which is particularly important under the tough operating condi-

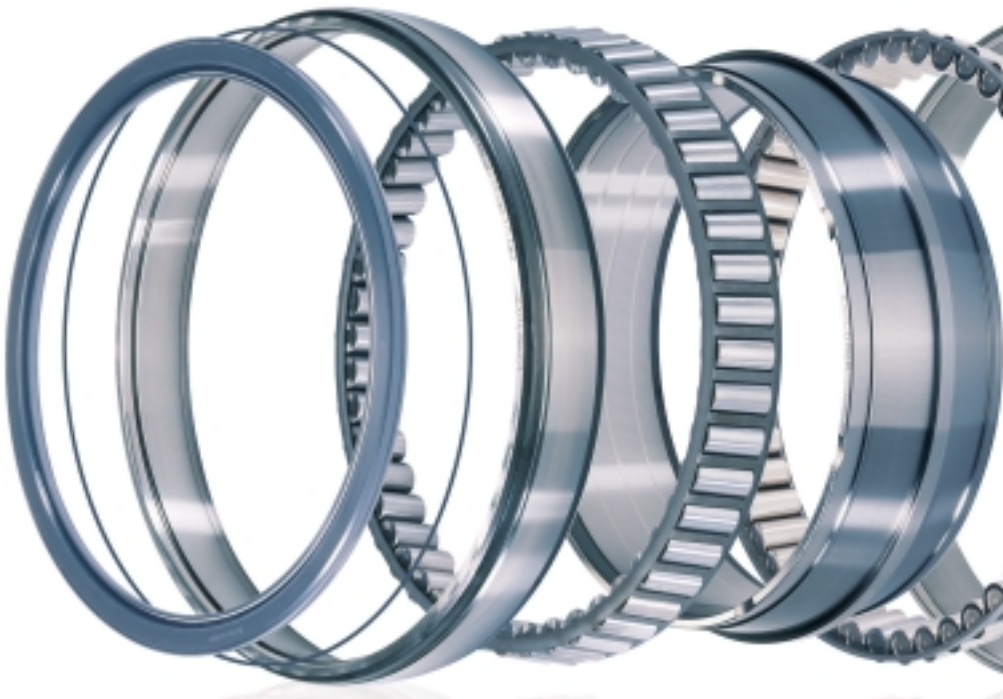

tions in rolling mills, characterized by contamination by scale and water.

The lubrication conditions in the bearings have also been further improved. Modified cage pocket design improves lubrication at the sliding contact between rollers and cages. The special raceway surface contributes to excellent lubricant film formation at the contacts between rollers and raceways.

Finally, the precise matching between the roller rows makes for a more even load distribution over all four rows of rollers.

There is thus a solid foundation for the longer service life of the SKF Explorer bearings compared with their predecessors.

Improved seals
The new seals are made of environmentally friendly hydrogenated acrylonitrile butadiene rubber. The new seal design has resulted in improved retention and sealing in the outer ring and increased sealing efficiency against the inner ring land.

Unique inspection/maintenance capabilities
Under the operating conditions which some four-row taper roller bearings are exposed to even the best bearings require efficient maintenance. The newly developed cage allows the cage and roller assemblies to be removed from the inner rings and to be re-installed. It is now possible to inspect the inner rings completely and if necessary, to refurbish them.

The seals also have been redesigned to be more maintenance-friendly. They are simply snapped into their retaining grooves. Dismounting and reinstallation could not be easier.

Efficient refurbishment
The SKF Explorer four-row taper roller bearings have decisive advantages when it comes to refurbishment:

- The cage and roller assemblies can now be easily dismantled from, and reassembled to the inner rings, allowing full inspection and eventual refurbishment.
- Cage and roller assemblies and inner and outer rings of various bearings can now be combined as desired to form “new” bearings. All that is required is to regrind the ring side faces, which is now also possible for inner rings.
- The new seal design permits quick removal and installation.

Availability
The most popular four-row taper roller bearings are already produced to the SKF Explorer performance class specifications. The designations of the SKF Explorer bearings are printed in blue in the product table.

Product identification
The designation of an SKF Explorer four-row taper roller bearing is the same as that of the previous standard bearing except that it carries the suffix E for easy recognition.

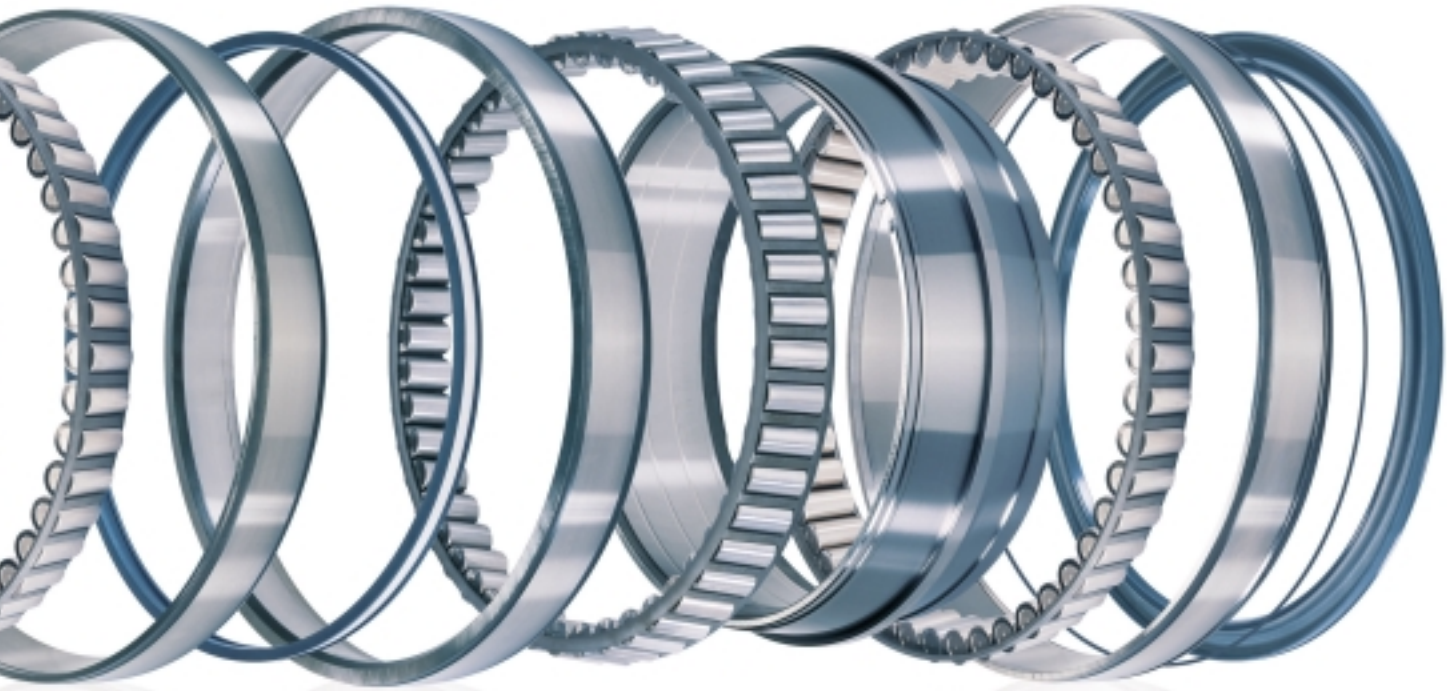

Proven bearing arrangements



Applications

- heavy plate mills
- hot strip mills
- cold rolling mills
- skin pass mills
- roughing mills
- universal beam mills
- rod, bar and wire mills

Requirements

- long service life
- precisely defined performance
- low maintenance
- no unplanned stoppages
- environmental friendliness
- technical support

Solution

SKF four-row taper roller bearings have been successfully used in rolling mills around the world for decades. The bearings are characterized by accuracy and reliability even under extreme operating conditions.

Whether in hot or cold rolling mills for flat products or profiles, SKF four-row taper roller bearings are often the first choice.

Over the past 80 years, SKF has accumulated considerable experience with rolling bearings in the steel industry and this know-how is always available to customers of the world's leading rolling bearing manufacturer. SKF application engineers provide support to both machine builders and end users around the world. On request, SKF experts will assist in mounting bearings and training maintenance personnel. When needed, SKF specialists are available on site anywhere in the world – saving time and money for the customer.



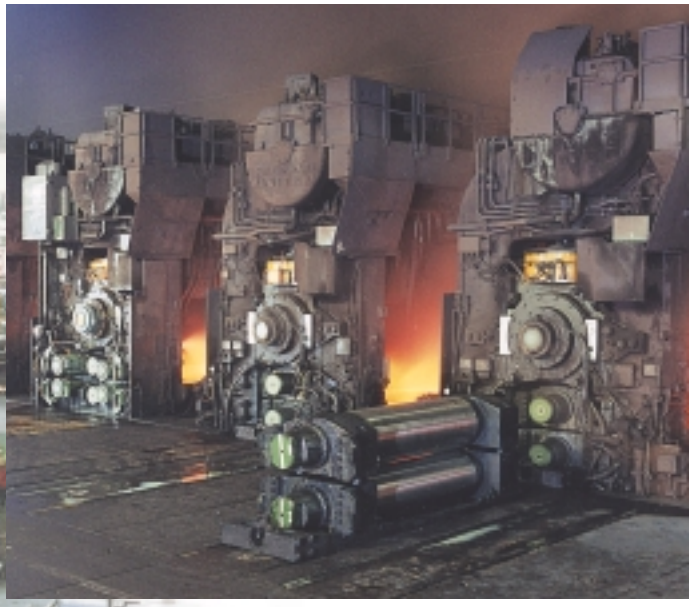

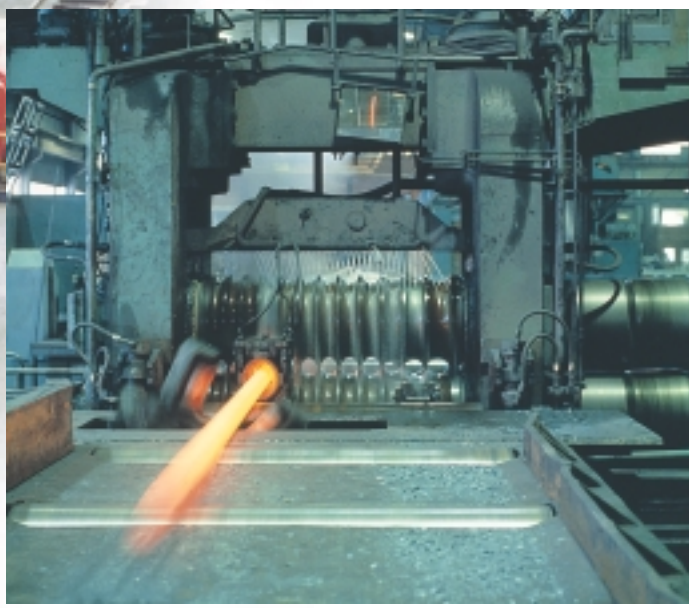

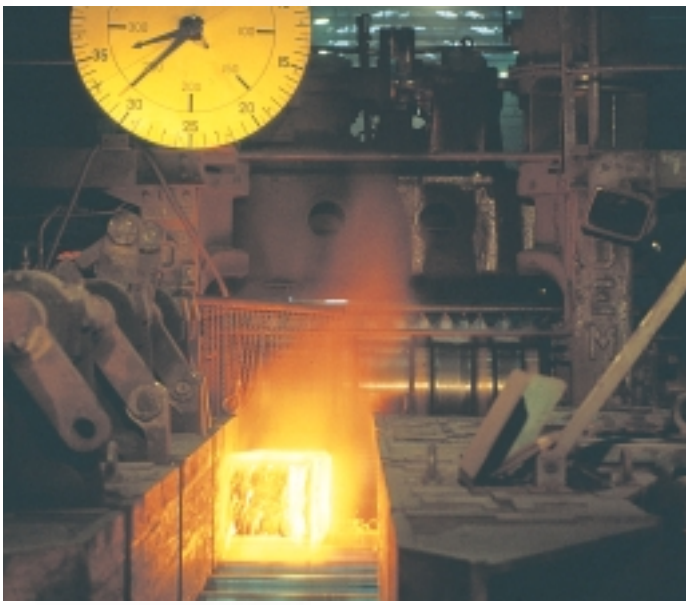

Application advices

Design of bearing arrangements

Roll neck requirements
In most rolling mill applications four-row taper roller bearings are mounted with a loose fit on the roll neck. The roll neck journal and the axial abutment for the inner rings must have a certain minimum hardness. The recommended hardness is

- 45 Shore (≈ 34 HRC) for the roll neck surface and
- 60 Shore (≈ 45 HRC) for the axial abutments for the inner rings

Axial location of inner rings on the roll neck
The inner rings must not be axially clamped. There must remain a total clearance between the bearing rings and their abutments of 0,2 to 1,3 mm (→ **fig 1**).

The inner rings must not be axially clamped on the roll neck

Fig 1

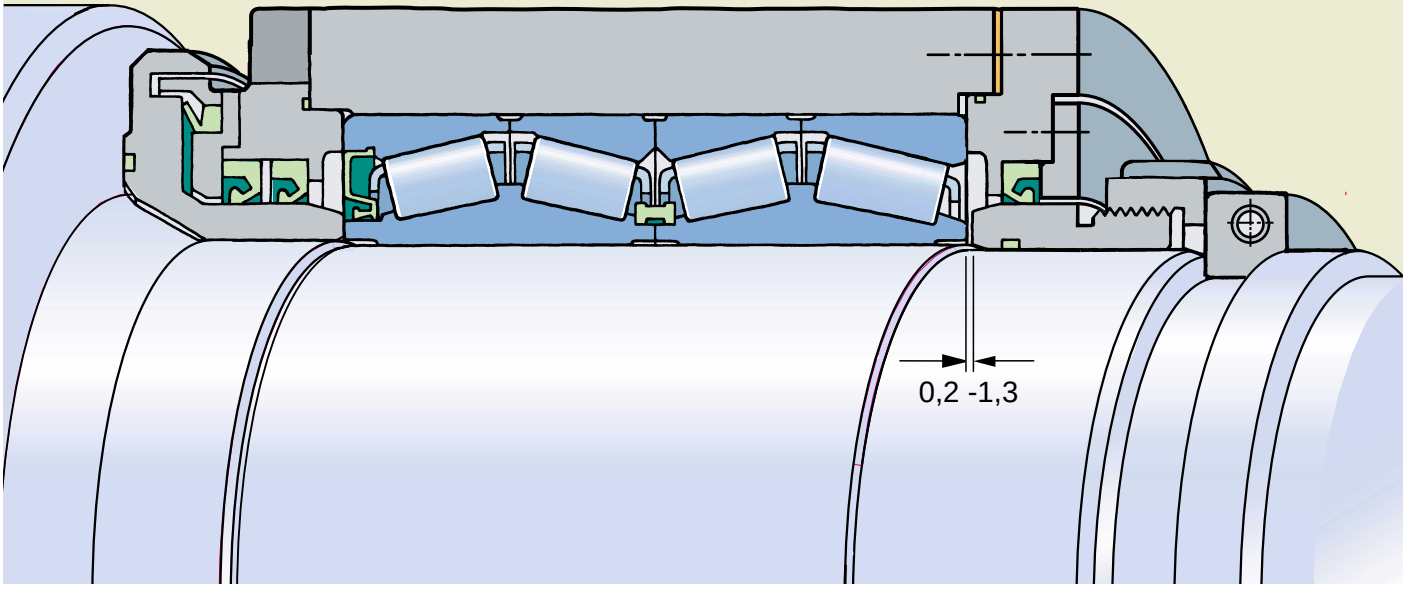

Lubrication

No bearing arrangement will function properly unless it is adequately lubricated. Depending on the design, several options are available for the lubrication of SKF four-row taper roller bearings.

Bearings without seals may be lubricated with grease (continuously or periodically) or with oil: oil bath, oil bath supplemented with oil-air, oil mist or circulating oil.

Sealed four-row taper roller bearings are manufactured to two designs:

- bearings which can be relubricated, the VA901 and VA903 or E1 and E3 executions for grease or oil lubrication, and
- completely sealed bearings, the VA902 or E2 executions only for grease lubrication.

Completely sealed bearings without lubrication facility

The bearings without relubrication facility should be filled with a high quality grease on mounting. The SKF grease LGHB 2 (➔ **page** 36). is recommended. The bearings normally are in operation in the chock for some 1 000 to 1 500 hours, depending on the working conditions. They are then removed from the chock, dismounted, washed, preserved, inspected and then filled with grease and remounted in the cleaned and inspected chock, the outer rings having been turned to expose a fresh loaded zone.

Air-oil lubrication for sealed bearings

The sealed bearings with relubrication feature when lubricated by air-oil can contribute to improved operational economy and reliability, particularly in cold rolling mills. The air-oil mixture is introduced from above via the grooves in the side faces of the individual outer rings (➔ **fig** 2). Compared with oil mist lubrication, only about one tenth of the lubricant quantity is required. The oil can be very accurately metered so that there is no risk of over-lubrication with its attendant heat generation at high rolling speeds.

Oil having a viscosity of up to 700 mm^2/s can be used and requires no heating. Metered drops are transported to the bearing along the walls of the ducts and leads by air. The drops are released from the ducts and finally collect at the bottom of the bearing. The air exits via the seals and is clean so that it does not contaminate the environment. The air stream then exits via the radial shaft seal, the V-ring and the labyrinth and serves to enhance the sealing efficiency of the labyrinth seal.

The air supplied to the air-oil lubrication equipment should be dried to prevent moisture being introduced into the bearing and causing corrosion.

Because the conditions in the chock are relatively clean, the use of the air-oil method can appreciably extend the service life of the bearings.

Sealed four-row taper roller bearing lubricated by air-oil

Fig 2

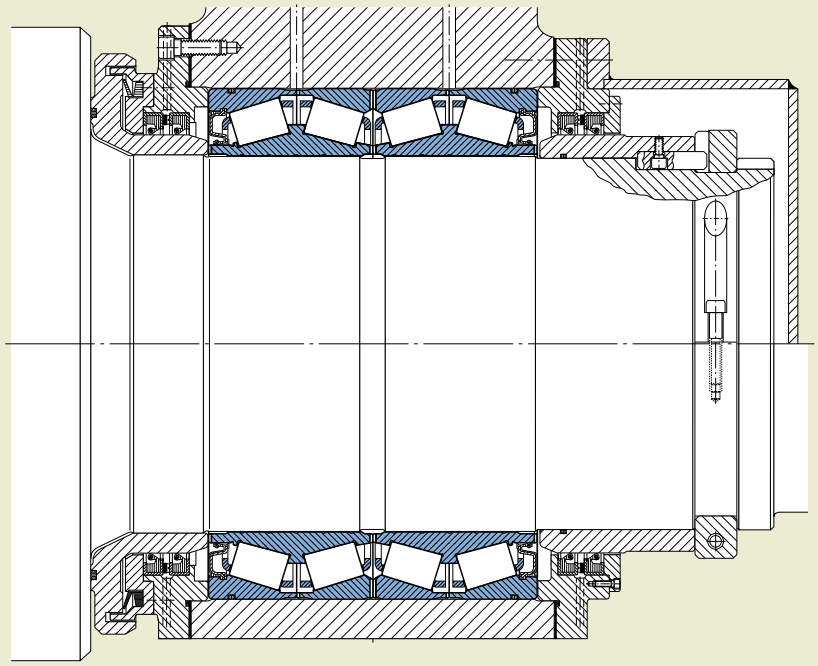

Mounting

Four-row taper roller bearings are high-precision mechanical components and should therefore be handled with appropriate care when mounting and dismounting. It is important to use the appropriate aids and tools and to follow the instructions supplied with each bearing. Detailed information is also contained in the SKF publications

- "Mounting and maintenance instructions for four-row taper roller bearings" and
- "Four-row taper roller bearings with out spacer rings – mounting and maintenance instructions".

Matching the bearing components
When mounting four-row taper roller bearings, the individual components of the bearing must be mounted in the correct order. Parts belonging together are identified by letter markings. All the components of one bearing are also marked with the same serial number, so that the parts of one bearing are not mixed with those of another when several bearings are mounted at the same time (➔ **fig** 3). NOTE: To make sure that the bearing components are mounted in the correct order, a sheet containing mounting instructions is packed with each bearing. This carefully describes the various steps involved (➔ **fig** 4).

Loaded zone markings
In the majority of cases in rolling mills, the outer rings of the bearings are subjected to a point load (constant direction). This means that only a section of the outer ring raceway will be under load. For this reason, the outer rings are divided into four zones which are indicated by the markings I to IV on the side faces of the rings (➔ **fig** 5). The markings indicating load zone I are also indicated by a line extending across the whole width of the outer rings. When mounting for the first time it is customary to install the bearing so that the zone I lies in the direction of the load. After each inspection, the outer rings should be turned so that another zone becomes the loaded zone. The order I, III, II, IV is recommended.

Fig 3



Marking of parts belonging together with serial number and letters

Mounting instructions are supplied with every bearing

Fig 4

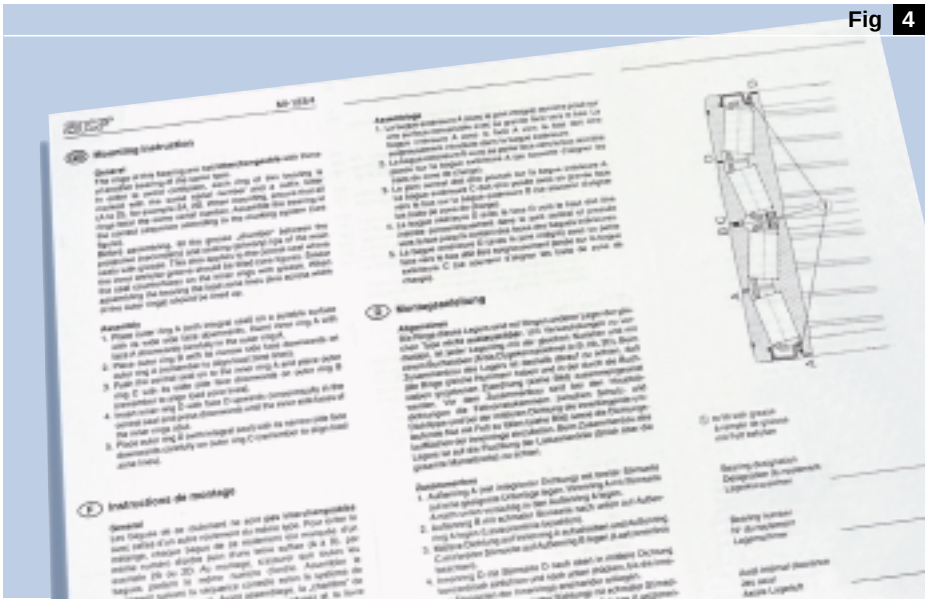

Load zone markings on the outer ring

Fig 5

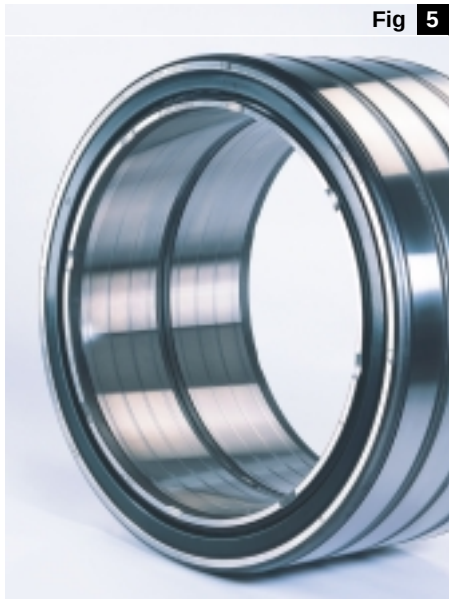

Monitoring the bearings in operation

SKF has considerable experience in the field of condition monitoring. The procedures developed by SKF are based on multi-parameter measurements. In addition to vibration measurements involving vibration velocity, vibration acceleration enveloping and SEE (Spectral Emitted Energy) other physical measurement categories are also measured for condition monitoring. The SKF system “Smart Chock Unit” has been specially developed for roll neck bearing monitoring.

Roll neck bearing arrangement with the Smart Chock Unit

The SKF system “Smart Chock Unit” enables reliable online monitoring of rolling mill bearing arrangements as well as the registration of the forces and temperatures occurring. The system includes intelligent analysis software as well as all the sensors and wiring required for condition monitoring (→ **fig 6**). The SKF Smart Chock Unit can be used to

- measure the axial and radial forces in operation,
- record the temperatures and temperature distribution, and
- continually monitor the condition of the roll neck bearing arrangement.

The following benefits for the rolling mill operator derive from the above:

- By detecting the signs of impeding failure at an early stage, failures can be virtually eliminated, thus unplanned stoppages and costly damage to plant can be avoided.
- Productivity is increased. Fewer unplanned stoppages increase plant uptime.
- The quality of the rolled material can be improved. The system supports process control by providing input data.

The “Smart chock unit”, an SKF solution for roll neck bearing arrangements

Fig 6

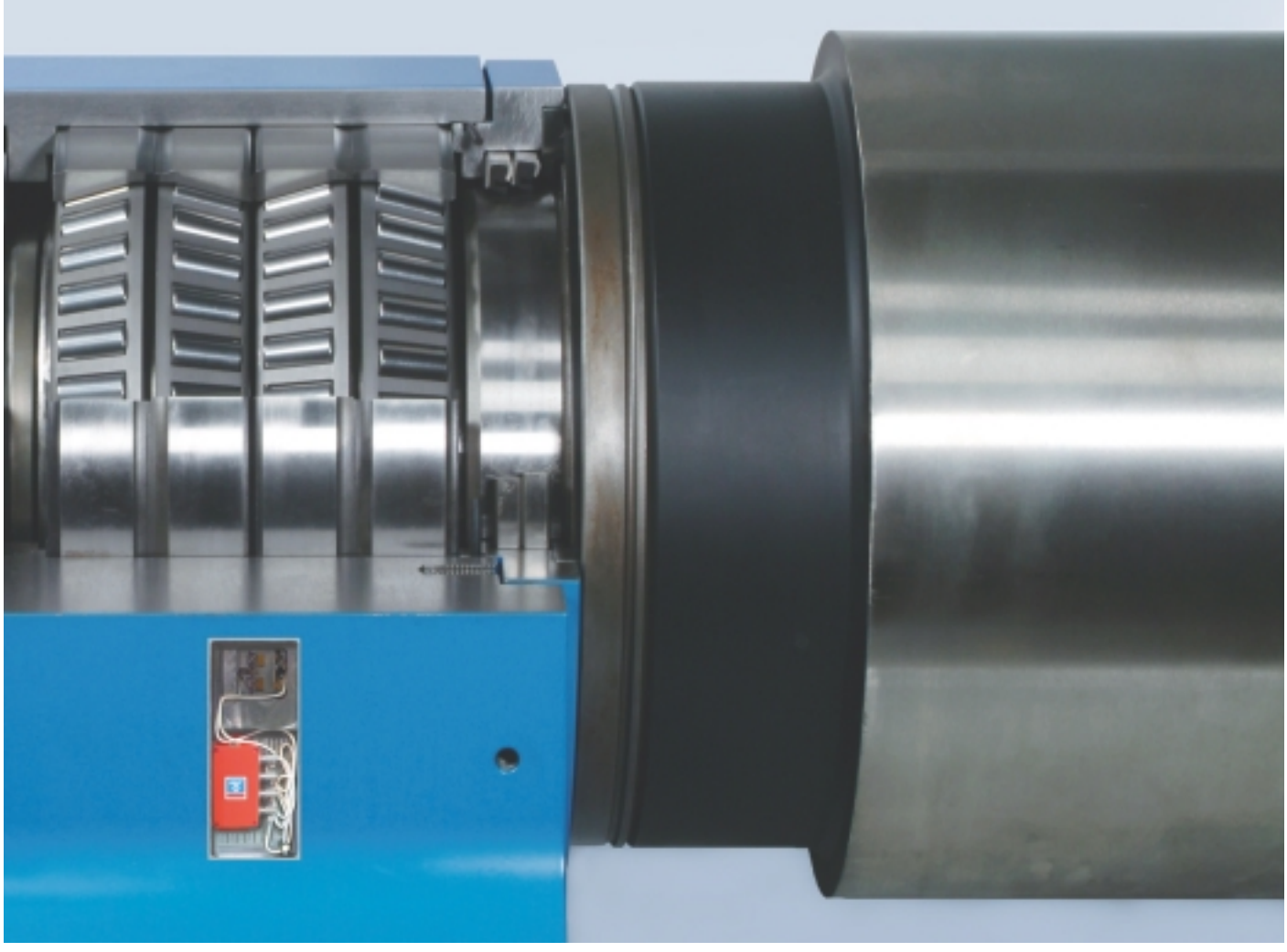

Dismounting

Four-row taper roller bearings are dismounted in the reverse order of mounting. Bearings that are to be reused after dismounting should be treated with the same care as when mounting.

The bearing components should be carefully washed and oiled. If damage is detected in the outer ring raceway, the rollers and inner ring raceways must also be checked for damage. The user can usually repair minor damages. Bearings that are damaged can often be repaired by an SKF Service Centre.

Disassembling SKF Explorer inner rings and cage and roller assemblies

The inner rings with cage and roller assemblies of SKF Explorer four-row taper roller bearings can be separated. This allows for easy and full inspection of the inner ring raceways and refurbishment.

For the separation a strip of spring steel and two screwdrivers are required. The screwdrivers should have a maximum hardness of 45 HRC to avoid damage to the bearing.
It is recommended that the following procedure be followed:

1. Displace the cage radially in one direction to obtain the maximum roller clearance between inner ring and cage at this side (→ **fig** 7).
2. Insert the spring steel strip between the inner ring and roller at this side, supporting it on the outer retaining flange (→ **fig** 8).
3. Place one screwdriver against the inner guide flange close to the strip and lift the cage and roller assembly on to the retaining flange. Use the second screwdriver to lift each individual roller, one at a time, over the retaining flange until the cage and roller assembly can be removed from the inner ring (→ **fig** 9).
4. As the cage is removed the rollers will fall out (→ **fig** 10). A suitable surface should be provided so that the rollers are not damaged or contaminated.
5. The rollers of a cage and roller assembly must remain together and not be mixed with rollers of another assembly.


Fig 7


Fig 8


Fig 9


Fig 10

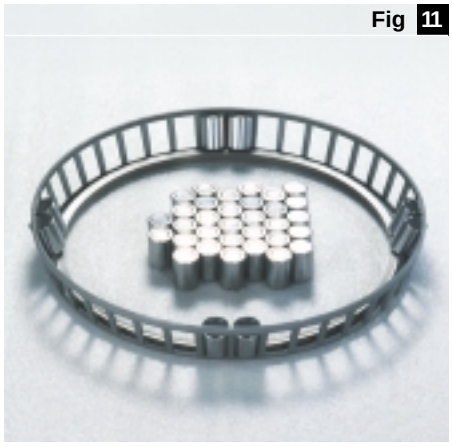
Fig 11


Fig 12


Fig 13

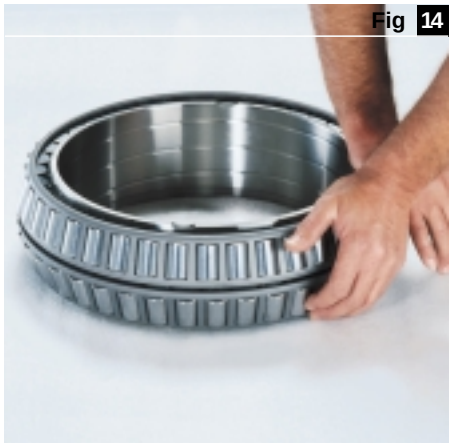
Fig 14

Resassembling SKF Explorer inner rings and cage and roller assemblies

To reassemble it is recommended to proceed as follows (the figures illustrate the reassembling of the second roller and cage assembly):

1. Insert the rollers into the cage with the small roller diameter downwards. A support ring may be used to prevent the rollers from falling out again (→ **fig** 11).
2. Put the inner ring into the cage and roller assembly (→ **fig** 12) and turn all the components together (→ **fig** 13).
3. Snap the cage and roller assembly over the outer retaining flange by hand (→ **fig** 14). With larger bearings the force required might be so large that a screwdriver should be used.

Bearing storage

Before being packaged in wooden crates, SKF four-row taper roller bearings are treated with a rust-inhibiting medium. They can be stored in their original unopened packaging for several years, provided the relative humidity in the storage room does not exceed 60 %.

The bearings must be stored lying down and should only be removed from the packaging just before mounting in order to prevent them from becoming dirty.

General bearing data

Designs

Open bearings

SKF four-row taper roller bearings are primarily produced with the TQO configuration (→ **fig 1**) in the TQON design without spacer rings (→ **fig 2**) In the TQO configuration, there are two roller and cage assemblies arranged face-to-face. The bearings are normally supplied with pressed steel window-type cages, although the larger sizes may have pierced rollers and steel pin-type cages (→ **fig 3**).

Four-row taper roller bearings are also produced with extended inner rings, which can serve as counter-faces for radial shaft seals (→ **fig 4**). Also these bearings can be supplied without spacer rings (design TQOEN) or with spacer rings (design TQOE).

Four-row taper roller bearings that are to be mounted with a loose fit on the roll neck, are normally supplied with a helical groove in the inner ring bore and lubrication grooves in the side faces of the inner rings. The lubrication grooves enable lubricant to be supplied to the contact surfaces of the inner rings and journal seating where there is a risk of wear occurring. Lubricant is stored and wear particles can be deposited in the helical grooves. This reduces wear of the roll neck.

Fig 1

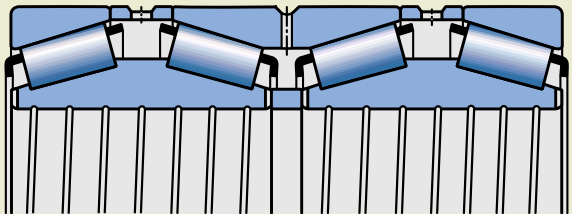

TQO configuration
Open bearing with spacer rings

Fig 2

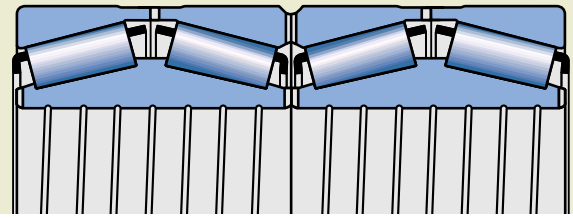

TQON design
Open bearing without spacer rings

Fig 3

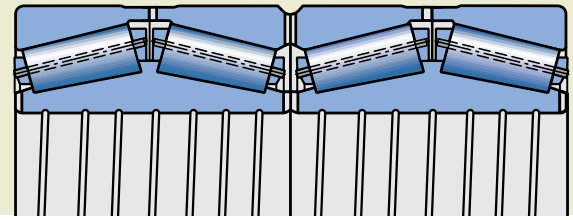

TQON.1 design
Open bearing without spacer rings with pierced rollers and steel pin-type cage

Fig 4

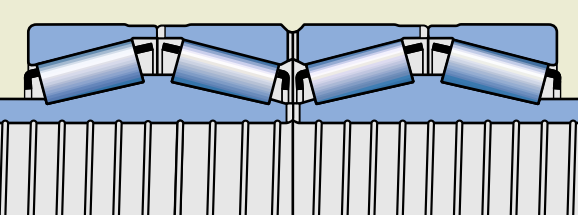

TQOEN design
Open bearing with extended inner rings. The extensions to the inner rings are designed as concentric sliding surfaces for radial shaft seal

Sealed bearings

Sealed SKF four-row taper roller bearings are available in many sizes and designs. Whenever possible, sealed bearings should be used for rolling mills. Compared with open bearings they offer considerable advantages:

- they achieve longer service lives,
- grease consumption is reduced (by up to 90 %),
- maintenance intervals can be extended, and
- grease does not escape from the bearings and the emulsions used for rolling do not become contaminated.

Sealed bearings meet the ecological and economic requirements now being set. Sealed bearings can simply replace open bearings as part of a rebuild or refurbishment because the boundary dimensions are the same. Sealed bearings are fitted with specially developed, C-shaped radial shaft seals on both sides. The seals permit

high sliding velocities and are intended for operating temperatures between –20 and +140 °C.

The SKF Explorer bearings have sheet steel reinforced radial shaft seals made of hydrogenated acrylonitrile butadiene rubbern (HNBR). They are snapped into the groove in the outer ring.

The other standard bearings have seals made of fluoro rubber (FPM) and reinforced with sheet steel. They are staked in a groove in the outer ring. Fluoro rubber seals require special handling (“Safety precautions”).

O-rings inserted in grooves in the outer ring outside surface prevent dirt or water from entering between the outer rings and the chock bore.

Design E1 and VA901

Sealed E1 and VA901 design bearings (→ **fig** 5) can be relubricated via lubrication grooves in the outer rings. In bearings without spacer rings, the seal between the two inner rings consists of a steel reinforced ring of acrylonitrile butadiene rubber. In bearings with spacer rings, the sealing between the inner rings is performed by two O-rings as shown in **fig** 8 The permissible operating temperature range for these seals is –40 to +100 °C.

Design E2 and VA902

Sealed E2 and VA902 design bearings (→ **fig** 6)) correspond to the E1 and VA901 designs, but cannot be relubricated.

Design E3 and VA903

Sealed E3 and VA903 design bearings (→ **fig** 7) have no seal between the inner rings. All other features are same as for E1 and VA091 design bearings

Fig 5

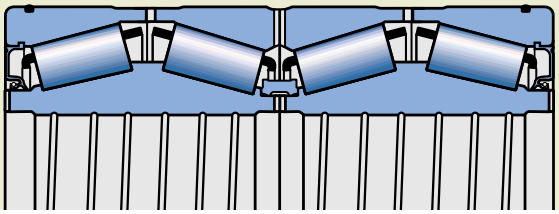

Designs E1 and VA901
Sealed bearing without spacer rings, with lubrication grooves in the outer ring faces

Fig 6

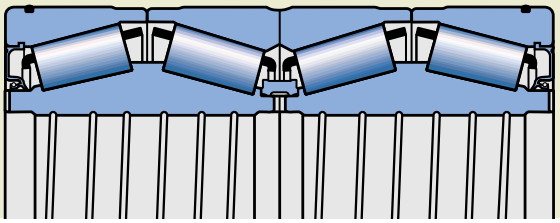

Designs E2 and VA902
Sealed bearing without spacer rings, no relubrication facilities

Fig 7

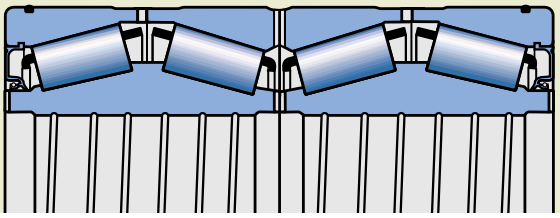

Designs E3 and VA903
Sealed bearing, with lubrication grooves in the outer ring faces but without seal between the inner rings

Warning: Safety precautions for fluoro rubber

Fluoro rubber is very stable and harmless in normal operating conditions up to +200 °C. However, if exposed to extreme temperatures above 300 °C, e.g. fire or the flame of a cutting torch, fluoro rubber seals give off hazardous fumes. These fumes can be harmful if inhaled, as well as to the eyes. In addition, once the seals have been heated to such temperatures, they are dangerous to handle even after they have cooled and should not touch the skin. If it is necessary to handle bearings with seals that have been subjected to high temperatures, such as when dismounting the bearing, the following safety precautions should be observed:

- always wear protective goggles, gloves and appropriate breathing apparatus,
- place the remains of the seals in an airtight plastic container marked with a symbol for “material will etch”,
- follow the safety precautions in the appropriate material safety data sheet (MSDS).

If there is unintentional contact with the seals, wash hands with soap and plenty of water and flush eyes with plenty of water and consult a doctor immediately. If the fumes have been inhaled, consult a doctor immediately.

The user is responsible for the correct use of the product during its service life and its proper disposal. SKF takes no responsibility for the improper handling of fluoro rubber seals or for any injury resulting from their use.

Other bearing design variants
In addition to the bearings shown in the product table starting on page 22, SKF also supplies four-row taper roller bearings in another configuration and many other design variants.

This includes, for example, bearings with inner and outer intermediate (spacer) rings between the roller rows Nos. 2 and 3 (➔ **fig** 8).

Bearings with the taper roller and cage assembly pairs in a back-to-back arrangement are also produced (TQI configuration). These bearings have one double row and two single row inner rings and two double row outer rings (➔ **fig** 9). This arrangement of the roller rows provides relatively stiff bearing arrangements which can take up high tilting moments.

For certain applications SKF also supplies bearings with a tapered bore. These are required when the bearing is to be mounted with a tight fit on the journal, for example, when high rolling speeds are to be employed.

Details of these other bearings will be found in the SKF catalogue “Large bearings” and the “SKF Interactive Engineering Catalogue” on CD-ROM or online at www.skf.com.

Fig 8

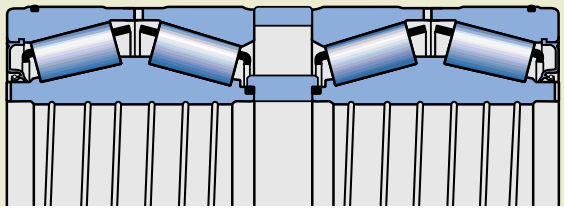

TQOSNP design
Sealed bearing without spacer rings, but with a spacer sleeve between the pairs of roller and cage assemblies

Fig 9

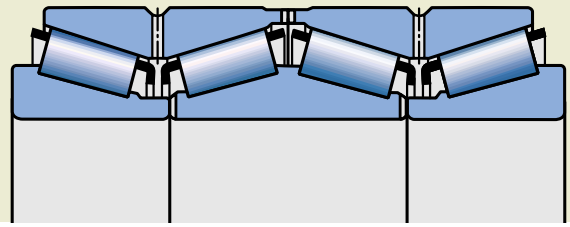

TQI design
Open bearing, pairs of roller and cage assemblies arranged back-to-back

Fig 10

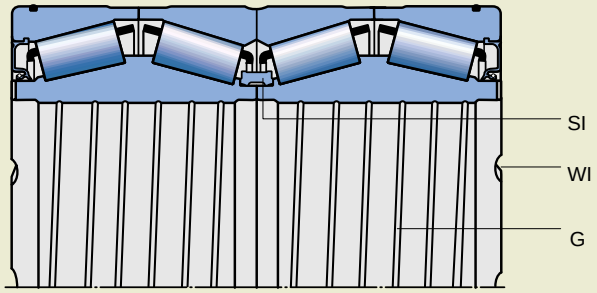

Design variant identification

Design identification

To enable the easy identification of the various different designs and variants, letters or letter combinations are given under the heading “Design” in the product table e.g. TQON/GW. The first part of the identification corresponds to the configurations and designs described on **pages 16** to **18** and shown in **figs** 1 to 9. The letters following the oblique stroke identify variants (➔ **fig** 10) and are explained below.

G	helical groove in the bearing bore
GW	G + W
GWI	G + WI
GWSI	G + W + SI
GWISI	G + WI + SI
GWOY	G + WO + Y
LS	lubrication holes in the inner ring extensions
W	lubrication grooves in the side faces of both outer and inner rings
WI	lubrication grooves in the inner ring side faces
WILS	WI + LS
WO	lubrication grooves in the outer ring side faces
SI	seal between the two inner rings
Y	annular groove and lubrication holes in the inner rings and gap between the inner rings

SKF Explorer class bearings

SKF Explorer four-row taper roller bearings are available as open bearings without spacer rings or as sealed bearings. The helical groove in the bore and case hardened bearing rings are standard for SKF Explorer bearings and are thus not identified by suffixes in the designation.

Dimensions

The boundary dimensions of four-row taper roller bearings have not been standardized by ISO. The dimensions of many of the cones and cups of the inch-size bearings do, however, conform to the ABMA Standard 19-1974 or ANSI B3.19-1975. The bore and outside diameters, however, often approximate to those of ISO 15:1998 Diameter Series 9 or 0.

Tolerances

SKF four-row taper roller bearings are produced with dimensional accuracy corresponding to the Normal tolerance classes for metric and inch-size bearings, respectively.

The running accuracy of all bearings is to tolerance class P5 specifications for metric taper roller bearings.

The width tolerance of the inner rings is

- ± 0,25 mm for bearings without spacer rings, and
- ± 1,524 mm for bearings with spacer rings.

Exceptions to this are indicated in the product table by footnotes.

The tolerances of the metric bearings conform to ISO 492:2002 and those of the inch-size bearings follow class 4, ISO 578:1987 and ABMA Standard 19.2-1994.

Internal clearance

SKF four-row taper roller bearings are delivered as ready-to-mount bearing units with an axial internal clearance adapted to the actual application. For the SKF Explorer bearings the mean value of the axial internal clearance expressed in µm is shown in the designation, preceded by the suffix C, e.g. C300 for a mean clearance of 300 µm (from 270 to 330 µm).

Influence of operating temperatures on bearing material

SKF four-row taper roller bearings are subjected to a special heat treatment such that they can be operated at temperatures of up to +150 °C without any inadmissible dimensional changes occurring.

Minimum load

In order to guarantee the satisfactory performance the bearings must always be subjected to a given minimum load. Otherwise the inertia forces of the rollers and cages and the friction in the lubricant can have a detrimental influence on rolling conditions in the bearing and may cause sliding movements to occur between the rollers and raceways.

The requisite minimum load to be applied can be obtained from

$F_{rm} = 0{,}02\ C$

where
F_{rm} = minimum radial load, kN
C = basic dynamic load rating, kN

The weight of the components supported by the bearing, together with the external rolling forces, almost always exceed the requisite minimum load. If this is not the case an additional radial load must be applied.

Equivalent dynamic bearing load

For dynamically loaded four-row taper roller bearings

$P = F_r + Y_1 F_a$ bei $F_a/F_r \leq e$
$P = 0{,}67\ F_r + Y_2 F_a$ bei $F_a/F_r > e$

The values for the calculation factors e, Y1 and Y2 will be found in the product table.

Equivalent static bearing load

For statically loaded four-row taper roller bearings

$P_0 = F_r + Y_0 F_a$

Values for the calculation factor Y_0 will be found in the product table.

Comparative load ratings

For rolling mill applications, load ratings are often used which are not calculated according to ISO 281:1990 but by a different method based on a rating life of 90 million revolutions (500 r/min for 3 000 operating hours). As a direct comparison of these load ratings with ISO load ratings is not possible, even if they are converted for 1 million revolutions (ISO life definition) “comparative” load ratings calculated by the same non-ISO method are given in the product table. These comparative load ratings cannot be used to calculate ISO lives.

For further information please refer to the SKF catalogue “Large bearings” or the “SKF Interactive Engineering Catalogue” on CD-ROM or online at www.skf.com.

Designations and suffixes

SKF four-row taper roller bearings are generally special bearings and are usually identified by a drawing number. The numbering system has undergone some changes over the years (→ designation scheme next page). Bearings having a modified internal design compared with the original are identified by a suffix letter A, B or C or a combination of these letters, e.g. AB. The meaning of these suffixes is specific to the drawing number.

Bearings to the SKF Explorer class specifications are identified by the suffix E and have inner and outer rings of case hardened steel as standard. The helical groove in the bore is also standard. Therefore, the relevant suffixes (HA1 and G) are not used for these bearings.

BT4 - 8089 EX1 / C300
BT4B - 334106 BG / HA1 C300 VA901
330870 BG

Prefixes

BT4	four-row taper roller bearing (current prefix)
BT4B	four-row taper roller bearing (earlier prefix)
–	the bearing type is only defined by the drawing (old SKF system for special bearings)

Drawing No.

0(000)	special bearing with outside diameter < 420 mm
8(000)	special bearing with outside diameter ≥ 420 mm
328000 to **334999**	special taper roller bearing

Design

–	original (standard) design
A, B, C	or combinations of these letters: modified internal design
E	SKF Explorer bearing without spacer rings
EX	SKF Explorer bearing with spacer rings
E(X)1	SKF Explorer bearings with seals of hydrogenated acrylonitrile butadiene rubber (HNBR), otherwise to VA901 specification
E(X)2	SKF Explorer bearings with seals of hydrogenated acrylonitrile butadiene rubber (HNBR), otherwise to VA902 specification
E(X)3	SKF Explorer bearings with seals of hydrogenated acrylonitrile butadiene rubber (HNBR), otherwise to VA903 specification
G	helical groove in bearing bore

Material

–	standard
HA1	outer and inner rings of case hardened steel
HA4	outer and inner rings and rollers of case hardened steel
HE1	outer and inner rings of vacuum remelted steel

Internal clearance

–	standard
C300	axial internal clearance, mean value 300 µm
C400	axial internal clearance, mean value 400 µm
etc.	

Seal design

VA901	fluoro rubber (FPM) seals at both sides, sealing ring between inner rings, can be relubricated via outer ring
VA902	fluoro rubber (FPM) seals at both sides, sealing ring between inner rings, cannot be relubricated
VA903	as VA901 but without sealing ring between inner rings
VA919	fluoro rubber (FPM) seals at both sides, can be relubricated via outer ring, inner rings without lubrication grooves in side faces, but with annular groove in bore and lubrication holes through guide flange
VA941	fluoro rubber (FPM) seals at both sides, cannot be relubricated via outer ring, inner ring with lubrication grooves in inboard side faces and annular groove and lubrication holes at outboard side between inner rings

Page..... 3

Page..... 10

Four-row taper roller bearings
d **260,350 – 355,000** mm

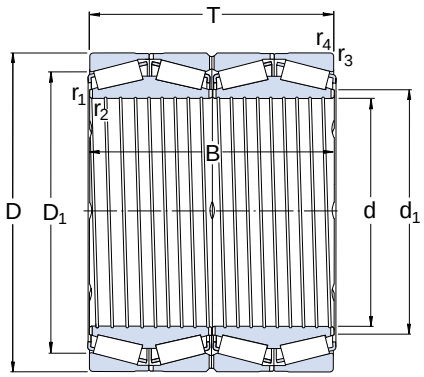

TQON/GW

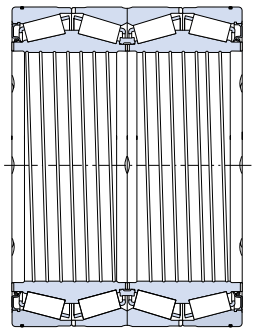

TQOSN/GWSI

Dimensions								Mass	Designation	Design
d	D	T	B	d_1 ≈	D_1 ≈	$r_{1,2}$ min	$r_{3,4}$ min			
mm/in								kg	–	–
260,350 10,2500	422,275 16,6250	317,500 12,5000	314,325 12,3750	298	372	6,4	3,3	165	**BT4B 331487 BG/HA1**	TQON/GW
292,100 11,5000	422,275 16,6250	269,875 10,6250	269,875 10,6250	324	379	6,4	3,3	125	**BT4B 331968 BG/HA1**	TQON/GW
304,800 12,0000	419,100 16,5000	269,875 10,6250	269,875 10,6250	328	378	1	6,4	105	**BT4-8057 G/HA1C300VA901**	TQOSN/GWSI
	495,300 19,5000	342,900 13,5000	342,900 13,5000	350	440	2	6,4	245	**BT4-8061 G/HA1C400VA901**	TQOSN/GWSI
304,902 12,0040	412,648 16,2460	266,700 10,5000	266,700 10,5000	325	374	3,3	3,3	100	**BT4-0004 G/HA1**	TQON/GW
317,500 12,5000	422,275 16,6250	269,875 10,6250	269,875 10,6250	342	384	1,5	3,3	105	**330870 BG**	TQON/GW
	422,275 16,6250	269,875 10,6250	269,875 10,6250	338	389	1,5	3,3	94,5	***BT4B 334023 E1/C675**	TQOSN/GWSI
	447,675 17,6250	327,025 12,8750	327,025 12,8750	340	398	3,3	3,3	165	**BT4B 331161 BG/HA1**	TQON/GW
330,302 13,0040	438,023 17,2450	254,000 10,000	247,650 9,7500	354	394	1,5	3,3	105	**BT4B 331664 AG/HA1**	TQON/GW
333,375 13,1250	469,900 18,5000	342,900 13,5000	342,900 13,5000	362	420	3,3	3,3	185	**BT4-8017/HA1C600VA941**	TQOSN/WILS
340,000 13,3858	520,000 20,4724	323,500 12,7362	323,500 12,7362	378	490	6	6	240	**BT4B 332963 B/HA1**	TQON/W
342,900 13,5000	533,400 21,0000	301,625 11,8750	307,975 12,1250	390	475	3,3	3,3	240	**BT4-8034 G/HA1**	TQON/GW
343,052 13,5060	457,098 17,9960	254,000 10,0000	254,000 10,0000	366	413	1,5	3,3	110	***330661 E/C475**	TQON/GW
	457,098 17,9960	254,000 10,0000	254,000 10,0000	362	420	1	3,3	110	***BT4B 328817 E1/C475**	TQOSN/GWSI
	457,098 17,9960	254,000 10,0000	254,000 10,0000	362	420	1	3,3	105	**BT4B 334106 BG/HA1C300VA901**	TQOSN/GWSI
347,662 13,6874	469,900 18,5000	260,350 10,2500	260,350 10,2500	372	430	1,5	3,3	125	**BT4B 331077 BG/HA1**	TQON/GW
355,000 13,9764	490,000 19,2913	316,000 12,4409	316,000 12,4409	382	446	1,5	3,3	170	**BT4-8020 G/HA1VA901**	TQOSN/GWSI

* SKF Explorer bearing. Other bearings will be converted to the Explorer class continouosly.
Please ask for availability of further SKF Explorer bearings.

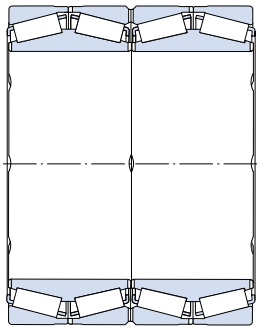

TQON/W

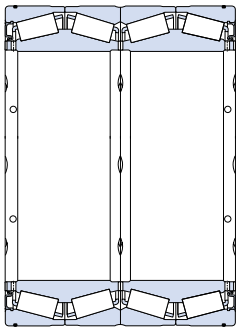

TQOSN/WILS

Designation	Basic load ratings dyn. C	stat. C_0	Fatigue load limit P_u	Calculation factors e	Y_1	Y_2	Y_0	Comparative data Load ratings radial C_F	axial C_{Fa}	Thrust factor K
–	kN		kN	–				kN		–
BT4B 331487 BG/HA1	4 460	8 000	710	0,33	2	3	2	1 100	179	1,76
BT4B 331968 BG/HA1	3 800	8 000	680	0,31	2,2	3,3	2,2	930	142	1,87
BT4-8057 G/HA1C300VA901	2 920	6 700	585	0,31	2,2	3,3	2,2	710	110	1,85
BT4-8061 G/HA1C400VA901	5 120	9 300	780	0,40	1,7	2,5	1,6	1 250	245	1,47
BT4-0004 G/HA1	3 190	7 500	640	0,31	2,2	3,3	2,2	780	122	1,83
330870 BG	3 360	8 150	680	0,31	2,2	3,3	2,2	815	129	1,83
BT4B 334023 E1/C675	3 250	6 550	570	0,33	2	3	2	695	114	1,76
BT4B 331161 BG/HA1	4 730	10 800	880	0,33	2	3	2	1 160	193	1,74
BT4B 331664 AG/HA1	2 810	7 350	600	0,46	1,5	2,2	1,4	680	154	1,27
BT4-8017/HA1C600VA941	4 130	10 200	830	0,33	2	3	2	1 000	165	1,76
BT4B 332963 B/HA1	5 610	10 400	880	0,30	2,3	3,4	2,2	1 370	194	2,01
BT4-8034 G/HA1	4 730	8 800	720	0,33	2	3	2	1 160	190	1,76
330661 E/C475	3 450	6 800	570	0,48	1,4	2,1	1,4	735	171	1,24
BT4B 328817 E1/C475	3 350	6 400	540	0,48	1,4	2,1	1,4	710	166	1,23
BT4B 334106 BG/HA1C300VA901	2 550	6 000	510	0,68	1	1,5	1	610	210	0,84
BT4B 331077 BG/HA1	3 910	8 500	695	0,33	2	3	2	950	153	1,76
BT4-8020 G/HA1VA901	4 460	10 000	830	0,33	2	3	2	1 080	177	1,75

Four-row taper roller bearings

d **355,600 – 409,575** mm

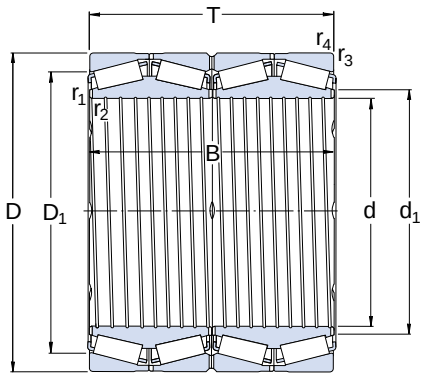

TQON/GW

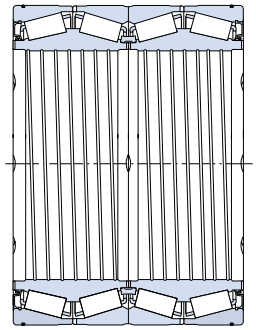

TQOSN/GWSI

Dimensions								Mass	Designation	Design
d	D	T	B	d_1 ≈	D_1 ≈	$r_{1,2}$ min	$r_{3,4}$ min			
mm/in								kg	–	–
355,600	482,600	269,875	265,113	382	432	1,5	3,3	140	*330662 E/C480	TQON/GW
14,0000	19,0000	10,6250	10,4375							
	482,600	269,875	265,113	380	436	1,5	3,3	134	*BT4B 328870 EX1/C480	TQOSN/GWSI
	19,0000	10,6250	10,4375							
	488,950	317,500	317,500	392	448	1,5	3,3	180	**331271 BG**	TQON/GW
	19,2500	12,5000	12,5000							
	488,950	317,500	317,500	382	446	1	3,3	170	*BT4B 328912 E3/C675	TQOSN/GW
	19,2500	12,5000	12,5000							
360,000	540,000	325,000	325,000	398	485	1,5	3	250	**BT4-8015 G/HA1**	TQON/GW
14,1732	21,2598	12,7953	12,7953							
380,000	560,000	360,000	390,000	417	500	3,3	5	300	**BT4-8033 G/HA1**	TQOEN/GW
14,9606	22,0472	14,1732	15,3543							
384,175	546,100	400,050	400,050	416	496	3,3	6,4	300	**BT4-8025 G/HA1C300VA903**	TQOSN/GW
15,1250	21,5000	15,7500	15,7500							
385,762	514,350	317,500	317,500	411	471	1	3,3	175	**BT4B 334042 BG/HA1VA901**	TQOSN/GWSI
15,1875	20,2500	12,5000	12,5000							
406,400	546,100	288,925	288,925	434	494	1,5	6,4	186	*BT4B 330650 E/C500	TQON/GW
16,0000	21,5000	11,3750	11,3750							
	546,100	288,925	288,925	434	498	1,5	6,4	180	**BT4B 328838 BG/HA1VA901**	TQOSN/GWSI
	21,5000	11,3750	11,3750							
	546,100	288,925	288,925	434	498	1,5	6,4	180	**BT4B 328838 BG/HA1VA902**	TQOSN/GWISI
	21,5000	11,3750	11,3750							
	546,100	288,925	288,925	434	498	1,5	6,4	185	**BT4-8014 G/HA1VA901**	TQOSN/GWSI
	21,5000	11,3750	11,3750							
	546,100	288,925	268,288	434	494	1,5	6,4	180	**331465 BG**	TQON/GW
	21,5000	11,3750	10,5625							
	546,100	330,000	330,000	434	498	1,5	6,4	200	**BT4B 334093 BG/HA1VA902**	TQOSN/GWISI
	21,5000	12,9921	12,9992							
	546,100	330,000	330,000	438	498	1,5	6,4	225	**BT4B 334092 AG/HA1**	TQON/GW
	21,5000	12,9921	12,9992							
	565,150	440,000	440,000	436	508	1,5	6,4	340	**BT4-8002 G/HA1**	TQON/GW
	22,2500	17,3228	17,3228							
409,575	546,100	334,962	334,962	434	498	1	6,4	205	**BT4-8021 G/HA1VA919**	TQOSN/GWOY
16,1250	21,5000	13,1875	13,1875							
	546,100	334,962	334,962	434	498	1	6,4	205	**BT4B 329004 BG/HA1VA901**	TQOSN/GWSI
	21,5000	13,1875	13,1875							
	546,100	334,962	334,962	438	490	1,5	6,4	220	**BT4B 331333 BG/HA1**	TQON/GW
	21,5000	13,1875	13,1875							

* SKF Explorer bearing. Other bearings will be converted to the Explorer class continouosly.
Please ask for availability of further SKF Explorer bearings.

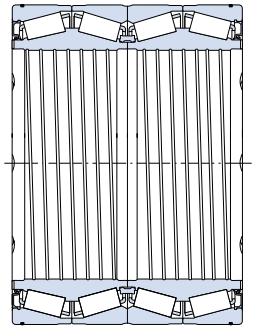

TQOSN/GWISI

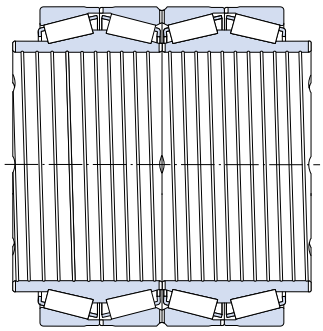

TQOEN/GW

Designation	Basic load ratings dyn.	stat.	Fatigue load limit	Calculation factors				Comparative data Load ratings radial	axial	Thrust factor
	C	C_0	P_u	e	Y_1	Y_2	Y_0	C_F	C_{Fa}	K
–	kN		kN	–				kN		–
330662 E/C480	4 000	8 000	655	0,48	1,4	2,1	1,4	850	198	1,24
BT4B 328870 EX1/C480	3 550	7 500	630	0,46	1,5	2,2	1,4	815	187	1,24
331271 BG	4 460	11 000	880	0,33	2	3	2	1 080	179	1,76
BT4B 328912 E3/C675	5 100	10 000	830	0,33	2	3	2	1 080	177	1,75
BT4-8015 G/HA1	5 720	10 800	900	0,30	2,3	3,4	2,2	1 400	207	1,93
BT4-8033 G/HA1	6 710	13 700	1 080	0,40	1,7	2,5	1,6	1 630	330	1,40
BT4-8025 G/HA1C300VA903	6 160	15 000	1 180	0,35	1,9	2,9	1,8	1 500	256	1,68
BT4B 334042 BG/HA1VA901	4 180	10 000	780	0,40	1,7	2,5	1,6	1 020	195	1,49
BT4B 330650 E/C500	5 000	10 200	815	0,48	1,4	2,1	1,4	1 080	252	1,23
BT4B 328838 BG/HA1VA901	4 180	9 500	750	0,48	1,4	2,1	1,4	1 020	238	1,22
BT4B 328838 BG/HA1VA902	4 180	9 500	750	0,48	1,4	2,1	1,4	1 020	238	1,22
BT4-8014 G/HA1VA901	3 300	7 800	655	0,68	1	1,5	1	800	276	0,84
331465 BG	4 180	9 500	750	0,48	1,4	2,1	1,4	1 020	238	1,22
BT4B 334093 BG/HA1VA902	4 400	10 200	815	0,48	1,4	2,1	1,4	1 080	252	1,23
BT4B 334092 AG/HA1	5 010	13 200	1 000	0,43	1,6	2,3	1,6	1 220	254	1,40
BT4-8002 G/HA1	7 650	18 600	1 430	0,33	2	3	2	1 900	302	1,82
BT4-8021 G/HA1VA919	4 840	12 000	950	0,40	1,7	2,5	1,6	1 200	231	1,47
BT4B 329004 BG/HA1VA901	4 840	12 000	950	0,40	1,7	2,5	1,6	1 200	231	1,47
BT4B 331333 BG/HA1	5 010	13 200	1 000	0,43	1,6	2,3	1,6	1 220	254	1,40

Four-row taper roller bearingsr
d **420,000 – 475,000** mm

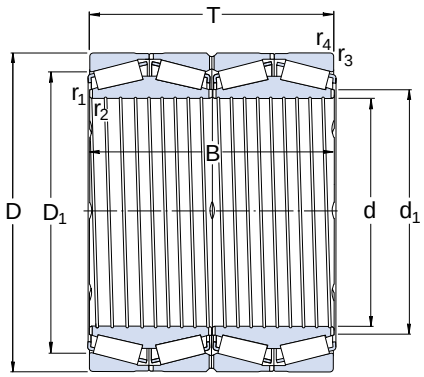

TQON/GW

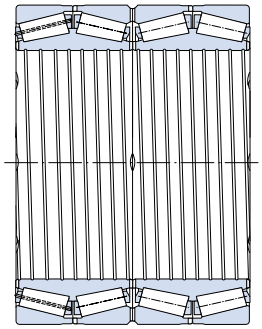

TQON.1/GW

Dimensions								Mass	Designation	Design
d	D	T	B	d_1 ≈	D_1 ≈	$r_{1,2}$ min	$r_{3,4}$ min			
mm/in								kg	–	–
420,000	574,000	480,000	480,000	450	530	2,5	5	345	**BT4-8018 G/HA1VA901**[1)]	TQOSN/GWSI
16,5354	22,5984	18,8976	18,8976							
430,000	570,000	380,000	380,000	458	510	2	5	260	**BT4-8049 G/HA1**	TQON/GW
16,9291	22,4409	14,9606	14,9606							
	575,000	380,000	380,000	458	518	1,5	5	280	**BT4-8006 BG/HA1**	TQON/GW
	22,6378	14,9606	14,9606							
	640,000	465,000	465,000	486	578	2,5	4	530	**BT4-8040 G/HA4**	TQON.1/GW
	25,1969	18,3071	18,3071							
431,800	571,500	279,400	279,400	458	530	1,5	3,3	185	**BT4-8019 G/HA1VA901**	TQOSN/GWSI
17,000	22,5000	11,0000	11,0000							
	571,500	336,550	336,550	458	516	1,5	3,3	240	**BT4B 331226 BG/HA1**	TQON/GW
	22,5000	13,2500	13,2500							
	571,500	336,550	336,550	458	530	1,5	3,3	215	**BT4-8003 G/HA1VA902**	TQOSN/GWISI
	22,5000	13,2500	13,2500							
440,000	590,000	480,000	480,000	468	539	1	5	365	**BT4B 334055 ABG/HA1VA902**[1)]	TQOSN/GWISI
17,3228	23,2283	18,8976	18,8976							
447,600	635,000	463,500	463,500	488	588	3,3	6,4	470	**BT4-8039 G/HA1VA901**	TQOSN/GWSI
17,6220	25,0000	18,2480	18,2480							
450,000	595,000	368,000	368,000	484	550	3	6	265	**BT4-8023 G/HA1VA919**	TQOSN/GWOY
17,7165	23,4252	14,4882	14,4882							
	595,000	368,000	368,000	486	542	3	6	285	***BT4B 332773 E/C725**	TQON/GW
	23,4252	14,4882	14,4882							
	595,000	404,000	404,000	480	545	2	6	305	**BT4-8044 G/HA1VA902**[1)]	TQOSN/GWISI
	23,4252	15,9055	15,9055							
	595,000	415,000	415,000	478	544	1,5	6	320	**BT4-8024 G/HA1**	TQON/GW
	23,4252	16,3386	16,3386							
457,200	596,900	279,400	276,225	484	550	1,5	3,3	190	**BT4B 328827 ABG/HA1VA902**	TQOSN/GWISI
18,0000	23,5000	11,0000	10,8750							
	596,900	279,400	276,225	484	550	1,5	3,3	190	***BT4B 328827 E2/C500**	TQOSN/GWISI
	23,5000	11,0000	10,8750							
460,000	610,000	360,000	360,000	479	565	3	6	290	***BT4B 331977 E/C725**	TQON/GW
18,1102	24,0157	14,1732	14,1732							
475,000	600,000	368,000	368,000	500	554	2	6	250	**BT4B 328913 BG/HA1C555**	TQON/GW
18,7008	23,6220	14,4882	14,4882							
	640,000	360,000	360,000	512	568	2	6	335	**BT4-8035 G/HA1**	TQON/GW
	25,1968	14,1732	14,1732							

* SKF Explorer bearing. Other bearings will be converted to the Explorer class continouosly.
Please ask for availability of further SKF Explorer bearings.
[1)] Non-standard inner ring width tolerance

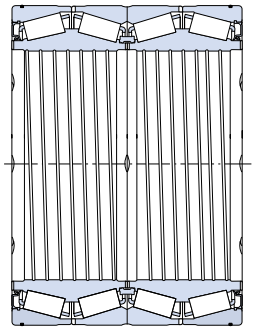

TQOSN/GWSI

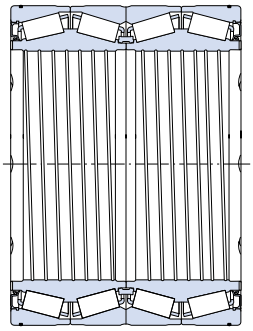

TQOSN/GWISI

Designation	Basic load ratings dyn.	stat.	Fatigue load limit	Calculation factors				Comparative data Load ratings radial	axial	Thrust factor
	C	C_0	P_u	e	Y_1	Y_2	Y_0	C_F	C_{Fa}	K
–	kN		kN	–				kN		–
BT4-8018 G/HA1VA901	7 210	18 600	1 430	0,31	2,2	3,3	2,2	1 760	279	1,83
BT4-8049 G/HA1	5 280	14 000	1 060	0,44	1,5	2,3	1,4	1 290	282	1,33
BT4-8006 BG/HA1	6 440	16 600	1 250	0,40	1,7	2,5	1,6	1 560	315	1,43
BT-8040 G/HA4	9 520	21 200	1 560	0,26	2,6	3,9	2,5	2 360	308	2,21
BT4-8019 G/HA1VA901	3 740	9 000	735	0,54	1,25	1,8	1,3	915	243	1,07
BT4B 331226 BG/HA1	5 280	14 000	1 060	0,44	1,5	2,3	1,4	1 290	282	1,33
BT4-8003 G/HA1VA902	4 840	12 700	980	0,44	1,5	2,3	1,4	1 180	254	1,34
BT4B 334055 ABG/HA1VA902	7 650	20 000	1 460	0,28	2,4	3,6	2,5	1 860	255	2,12
BT4-8039 G/HA1VA901	7 650	20 000	1 460	0,33	2	3	2	1 900	313	1,76
BT4-8023 G/HA1VA919	5 280	13 700	1 040	0,31	2,2	3,3	2,2	1 290	206	1,82
BT4B 332773 E/C725	6 800	16 300	1 220	0,33	2	3	2	1 460	236	1,76
BT4-8044 G/HA1VA902	5 940	16 300	1 220	0,33	2	3	2	1 460	236	1,76
BT4-8024 G/HA1	7 040	19 000	1 400	0,31	2,2	3,3	2,2	1 730	267	1,87
BT4B 328827 ABG/HA1VA902	4 290	10 000	780	0,48	1,4	2,1	1,4	1 040	242	1,24
BT4B 328827 E2/C500	4 900	10 000	780	0,48	1,4	2,1	1,4	1 040	242	1,24
BT4B 331977 E/C725	7 500	16 300	1 250	0,33	2	3	2	1 600	259	1,76
BT4B 328913 BG/HA1C555	5 720	16 600	1 250	0,30	2,3	3,4	2,2	1 400	200	2,03
BT4-8035 G/HA1	5 500	15 300	1 120	0,33	2	3	2	1 340	222	1,76

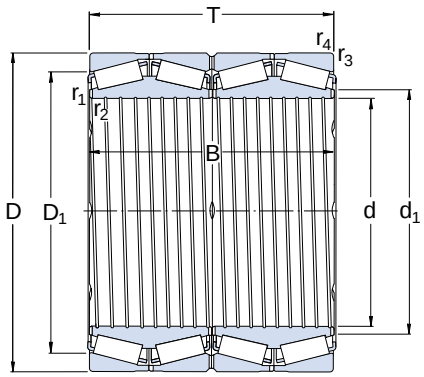

TQON/GW

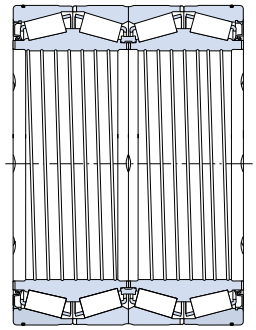

TQOSN/GWSI

Dimensions								Mass	Designation	Design
d	D	T	B	d_1 ≈	D_1 ≈	$r_{1,2}$ min	$r_{3,4}$ min			
mm/in								kg	–	–
479,425	679,450	495,300	495,300	520	610	3,3	6,4	585	**BT4B 330886 CG/HA1**	TQON/GW
18,8750	26,7500	19,5000	19,5000							
	679,450	495,300	495,300	520	610	3,3	6,4	565	**BT4B 334116 BG/HA1VA901**	TQOSN/GWSI
	26,7500	19,5000	19,5000							
482,600	615,950	330,200	330,200	512	570	3,3	6,4	240	***330641 E/C725**	TQON/GW
19,0000	24,2500	13,0000	13,0000							
	615,950	330,200	330,200	505	577	1	6,4	233	***BT4B 328842 E1/C725**	TQOSN/GWSI
	24,2500	13,0000	13,0000							
	615,950	330,200	330,200	505	577	1	6,4	233	***BT4B 328842 E2/C725**	TQOSN/GWISI
	24,2500	13,0000	13,0000							
	615,950	330,200	419,100	505	577	1	6,4	240	**BT4B 334072 BG/HA1VA901**	TQOESN/GWSI
	24,2500	13,0000	16,5000							
	615,950	330,200	419,100	505	577	1	6,4	240	**BT4B 334072 BG/HA1VA903**	TQOESN/GW
	24,2500	13,0000	16,5000							
	615,950	330,200	419,100	512	570	3,5	6,4	250	**BT4B 331626 BG/HA1**	TQOEN/GW
	24,2500	13,0000	16,5000							
	615,950	420,000	420,000	505	577	2,8	4,4	280	**BT4-8062 G/HA1VA901**	TQOSN/GWSI
	24,2500	16,5354	16,5354							
	635,000	421,000	421,000	512	578	3	6,4	365	**BT4B 334105 BG/HA1**	TQON/GW
	25,0000	16,5748	16,5748							
489,026	634,873	320,675	320,675	522	584	3,3	3,3	267	***331090 E/C700**	TQON/GW
19,2530	24,9950	12,6250	12,6250							
	634,873	320,675	320,675	516	588	2,5	3,3	240	**BT4B 334014 AAG/HA1VA901**	TQOSN/GWSI
	24,9950	12,6250	12,6250							
501,650	711,200	520,700	520,700	550	655	3,3	6,4	610	**BT4-8059 G/HA1VA901**	TQOSN/GWSI
19,7500	28,0000	20,5000	20,5000							
510,000	655,000	379,000	377,000	539	602	1,5	6,4	323	***BT4B 331747 E/C775**	TQON/GW
20,9787	25,7874	14,9213	14,8425							
514,350	673,100	422,275	422,275	537	606	3,3	6,4	395	**BT4-8045 G/HA1VA901**	TQOSN/GWSI
20,2500	26,5000	16,6250	16,6250							
	673,100	422,275	422,275	545	614	3,3	6,4	405	**331157 BG**	TQON/GW
	26,5000	16,6250	16,6250							
530,000	680,000	440,000	440,000	558	624	1,5	3	405	**BT4-8043 G/HA1**	TQON/GW
20,8661	26,7717	17,3228	17,3228							
540,000	690,000	400,000	400,000	568	635	2	5	364	***BT4-8108 E/C625**	TQON/GW
21,2598	27,1654	15,7480	15,7480							
	690,000	440,000	440,000	565	636	2	5	395	**BT4-8038 G/HA1VA901**	TQOSN/GWSI
	27,1654	17,3228	17,3228							

* SKF Explorer bearing. Other bearings will be converted to the Explorer class continouosly.
Please ask for availability of further SKF Explorer bearings.

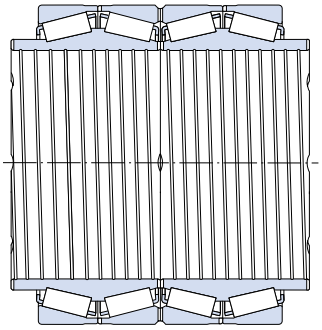

TQOEN/GW

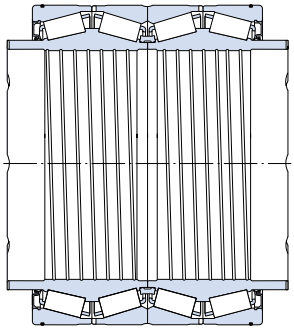

TQOESN/GWSI

Designation	Basic load ratings dyn.	stat.	Fatigue load limit	Calculation factors				Comparative data Load ratings radial	axial	Thrust factor
	C	C_0	P_u	e	Y_1	Y_2	Y_0	C_F	C_{Fa}	K
–	kN		kN	–				kN		–
BT4B 330866 CG/HA1	10 100	25 500	1 830	0,33	2	3	2	2 500	409	1,76
BT4B 334116 BG/HA1VA901	9 350	22 400	1 660	0,33	2	3	2	2 280	372	1,76
330641 E/C725	6 300	15 300	1 120	0,33	2	3	2	1 340	222	1,76
BT4B 328842 E1/C725	6 100	13 700	1 060	0,33	2	3	2	1 290	213	1,76
BT4B 328842 E2/C725	6 100	13 700	1 060	0,33	2	3	2	1 290	213	1,76
BT4B 334072 BG/HA1VA901	5 280	13 700	1 060	0,33	2	3	2	1 290	213	1,76
BT4B 334972 BG/HA1VA903	5 280	13 700	1 060	0,33	2	3	2	1 290	213	1,76
BT4B 331626 BG/HA1	5 500	15 300	1 120	0,33	2	3	2	1 340	222	1,76
BT4-8062 G/HA1VA901	5 500	15 300	1 120	0,33	2	3	2	1 340	222	1,76
BT4B 334105 BG/HA1	7 370	20 400	1 460	0,33	2	3	2	1 800	295	1,76
331090 E/C700	6 300	14 600	1 080	0,35	1,9	2,9	1,8	1 340	224	1,70
BT4B 334014 AAG/HA1C300VA901	5 230	12 500	950	0,37	1,8	2,7	1,8	1 270	234	1,54
BT4-8059 G/HA1VA901	8 090	19 600	1 460	0,33	2	3	2	2 000	324	1,76
BT4B 331747 E/C775	7 800	19 000	1 370	0,33	2	3	2	1 660	273	1,76
BT4-8045 G/HA1VA901	6 820	19 000	1 370	0,33	2	3	2	1 660	273	1,76
331157 BG	7 810	21 600	1 560	0,31	2,2	3,3	2,2	1 930	301	1,83
BT4-8043 G/HA1	8 250	23 600	1 630	0,33	2	3	2	2 040	321	1,82
BT4-8108 E/C625	8 150	19 300	1 400	0,4	1,7	2,5	1,6	1 730	345	1,45
BT4-8038 G/HA1VA901	7 480	21 200	1 500	0,33	2	3	2	1 860	301	1,76

Four-row taper roller bearings
d **558,800 – 685,800** mm

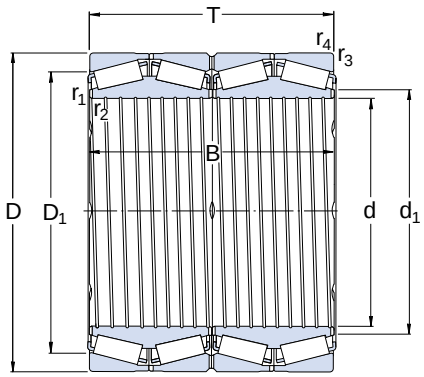

TQON/GW

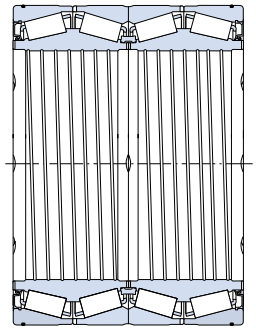

TQOSN/GWSI

Dimensions								Mass	Designation	Design
d	D	T	B	d_1 ≈	D_1 ≈	$r_{1,2}$ min	$r_{3,4}$ min			
mm/in								kg	–	–
558,800	736,600	409,575	409,575	594	672	3,3	6,4	480	**BT4B 330993 AG/HA1**	TQON/GW
22,0000	29,0000	16,1250	16,1250							
	736,600	457,200	455,612	591	666	3,3	6,4	515	**BT4-8022 G/HA1VA919**	TQOSN/GWOY
	29,0000	18,0000	17,9375							
584,200	730,250	349,250	342,900	601	678	1,5	3,3	327	***BT4B 331189 E/C600**	TQON/GW
23,0000	28,7500	13,7500	13,5000							
585,788	771,525	479,425	479,425	622	704	3,3	6,4	620	**BT4B 331093 BG/HA1**	TQON/GW
23,0625	30,3750	18,8750	18,8750							
595,312	844,550	615,950	615,950	642	754	3,3	6,4	1 180	***BT4B 331300 E/C775**	TQON/GW
23,4375	33,2500	24,2500	24,2500							
609,600	787,400	361,950	361,950	645	735	3,3	6,4	425	**BT4-8054 G/HA1VA902**	TQOSN/GWISI
24,0000	31,0000	14,2500	14,2500							
620,000	800,000	363,500	363,500	655	740	2	6	440	**BT4-8055 G/HA1VA902**	TQOSN/GWISI
24,4094	31,4961	14,3110	14,3110							
625,000	815,000	480,000	480,000	656	746	3,2	6,5	660	***BT4-8031 E/C800**	TQON/GW
24,6063	32,0866	18,8976	18,8976							
650,000	1 040,000	610,000	610,000	740	905	15	10	1 970	**BT4-8036 G/HA1**	TQON/GW
25,5906	40,9449	24,0157	24,0157							
	1 040,000	610,000	610,000	730	905	15	10	1 970	**BT4-8037 G/HA1VA901**	TQOSN/GWSI
	40,9449	24,0157	24,0157							
660,000	1 070,000	648,000	648,000	760	960	6	10	2 260	**BT4-8060 G/HA4C300VA901**	TQOSN.1/GWSI
25,9843	42,1260	25,5118	25,5118							
660,400	812,800	365,125	365,125	698	756	3,3	6,4	415	**BT4B 331190 BG/HA1**	TQON/GW
26,0000	32,0000	14,3750	14,3750							
	812,800	365,125	365,125	692	784	2	6,4	395	**BT4B 328977 BG/HA1VA901**	TQOSN/GWSI
	32,0000	14,3750	14,3750							
679,450	901,700	552,450	552,450	722	824	3,3	6,4	970	**BT4B 334015 BG/HA1VA901**	TQOSN/GWSI
26,7500	35,5000	21,7500	21,7500							
685,800	876,000	355,600	352,425	730	805	3,3	6,4	525	**BT4B 331089 CG/HA1**	TQON/GW
27,0000	34,5000	14,0000	13,8750							
	876,300	355,600	352,425	730	818	3,3	6,4	505	**BT4B 328955 ABG/HA1VA902**	TQOSN/GWISI
	34,5000	14,0000	13,8750							
	876,300	355,600	352,425	730	818	3,3	6,4	505	**BT4B 328955 BG/HA1VA901**	TQOSN/GWISI
	34,5000	14,0000	13,8750							

* SKF Explorer bearing. Other bearings will be converted to the Explorer class continouosly.
Please ask for availability of further SKF Explorer bearings.

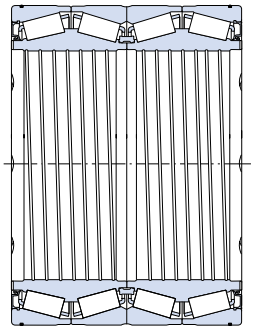

TQOSN/GWISI

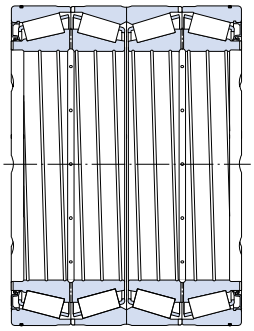

TQOSN/GWOY

Designation	Basic load ratings dyn.	stat.	Fatigue load limit	Calculation factors				Comparative data Load ratings radial	axial	Thrust factor
	C	C_0	P_u	e	Y_1	Y_2	Y_0	C_F	C_{Fa}	K
–	kN		kN	–				kN		–
BT4B 330993 AG/HA1	8 250	22 000	1 560	0,35	1,9	2,9	1,8	2 040	346	1,69
BT4-8022 G/HA1VA919	8 580	23 200	1 630	0,35	1,9	2,9	1,8	2 120	355	1,69
BT4B 331189 E/C600	6 800	17 000	1 200	0,43	1,6	2,3	1,6	1 460	305	1,36
BT4B 331093 BG/HA1	10 600	30 000	2 040	0,33	2	3	2	2 650	426	1,76
BT4B 331300 E/C775	17 300	39 000	2 550	0,33	2	3	2	3 750	602	1,76
BT4-8054 G/HA1VA902	7 370	18 600	1 370	0,37	1,8	2,7	1,8	1 800	323	1,58
BT4-8055 G/HA1VA902	7 040	18 000	1 320	0,37	1,8	2,7	1,8	1 730	314	1,56
BT4-8031 E/C800	13 200	31 000	2 120	0,33	2	3	2	2 850	468	1,74
BT4-8036 G/HA1	17 600	36 500	2 500	0,31	2,2	3,3	2,2	4 400	679	1,84
BT4-8037 G/HA1VA901	17 600	36 500	2 500	0,31	2,2	3,3	2,2	4 400	679	1,84
BT4-8060 G/HA4C300VA901	19 000	38 000	2 500	0,31	2,2	3,3	2,2	4 750	749	1,83
BT4B 331190 BG/HA1	7 210	22 400	1 530	0,33	2	3	2	1 760	284	1,76
BT4B 328977 BG/HA1VA901	7 210	20 400	1 430	0,33	2	3	2	1 730	284	1,76
BT4B 334015 BG/HA1VA901	13 200	36 000	2 400	0,33	2	3	2	3 250	528	1,76
BT4B 331089 CG/HA1	7 810	22 000	1 500	0,43	1,6	2,3	1,6	1 900	393	1,40
BT4B 328955 ABG/HA1VA902	7 650	20 000	1 400	0,37	1,8	2,7	1,8	1 860	333	1,62
BT4B 328955 BG/HA1VA902	7 650	20 000	1 400	0,37	1,8	2,7	1,8	1 860	333	1,62

Four-row taper roller bearings

d **710,000 – 1 346,200** mm

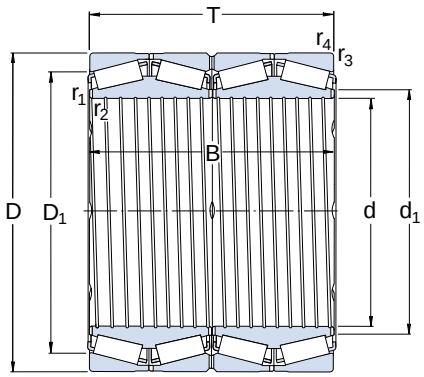

TQON/GW

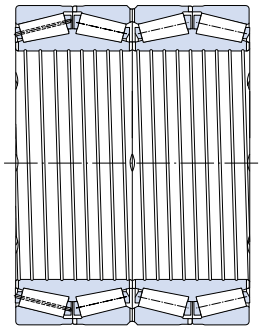

TQON.1/GW

Dimensions								Mass	Designation	Design
d	D	T	B	d_1 ≈	D_1 ≈	$r_{1,2}$ min	$r_{3,4}$ min			
mm/in								kg	–	–
710,000 27,9528	900,000 35,4331	410,000 16,1417	410,000 16,1417	750	835	3	6	620	**BT4B 331351 BG/HA1**	TQON/GW
750,000 29,5276	950,000 37,4016	410,000 16,1417	410,000 16,1417	800	878	3	6	705	***BT4-8048 E/C725**	TQON/GW
762,000 30,0000	1 066,800 42,0000	736,600 29,0000	723,900 28,5000	825	952	8,9	12,7	2 090	**BT4B 331907 BG/HA4**	TQON.1/GW
1 346,200 53,0000	1 729,740 68,1000	1 143,000 45,0000	1 143,000 45,0000	1 415	1 580	5	12	6 980	**BT4-8042 G/HA4**	TQON.1/GW

* SKF Explorer bearing. Other bearings will be converted to the Explorer class continouosly.
Please ask for availability of further SKF Explorer bearings.

Designation	Basic load ratings dyn.	stat.	Fatigue load limit	Calculation factors				Comparative data Load ratings radial	axial	Thrust factor
	C	C_0	P_u	e	Y_1	Y_2	Y_0	C_F	C_{Fa}	K
–	kN		kN	–				kN		–
BT4B 331351 BG/HA1	9 680	27 000	1 800	0,35	1,9	2,9	1,8	2 360	404	1,66
BT4-8048 E/C725	10 800	26 500	1 730	0,37	1,8	2,7	1,8	2 280	415	1,58
BT4B 331907 BG/HA4	22 000	58 500	3 600	0,33	2	3	2	5 500	909	1,76
BT4-8042 G/HA4	49 500	163 000	8 300	0,31	2,2	3,3	2,2	12 200	1 940	1,83

Other SKF products

CR radial shaft seals and V-rings

The environmental conditions in rolling mills are very unfavourable where bearings are concerned, as there are considerable quantities of water, emulsion and solid contaminants, e.g. scale. This means that both the open and sealed bearings must be protected in the chocks by reliable external seals. SKF has a comprehensive range of large radial shaft seals and V-rings covering all the designs required for this external sealing.

Radial shaft seals of the HDS1 and HDS2 designs(→ **figs** 1 and 2) are particularly recommended for use in rolling mills. They are suitable for difficult sealing positions under arduous conditions and are resistant to wear and corrosion. These seals are characterized by their robust shell that covers three sides of the seal body, effectively protecting the spring-loaded sealing lip from mechanical damage. The HDS3 design (→ **figs** 3 and 4) incorporates spacer lugs on the seal face. These enable two or more such seals to be mounted in tandem at a given distance from each other, or can be useful when positioning the seal at the correct distance in the housing bore.

Detailed information on radial shaft seals and V-rings will be found in the SKF catalogue “CR seals” and the “SKF Interactive Engineering Catalogue” on CD-ROM or online at www.skf.com.

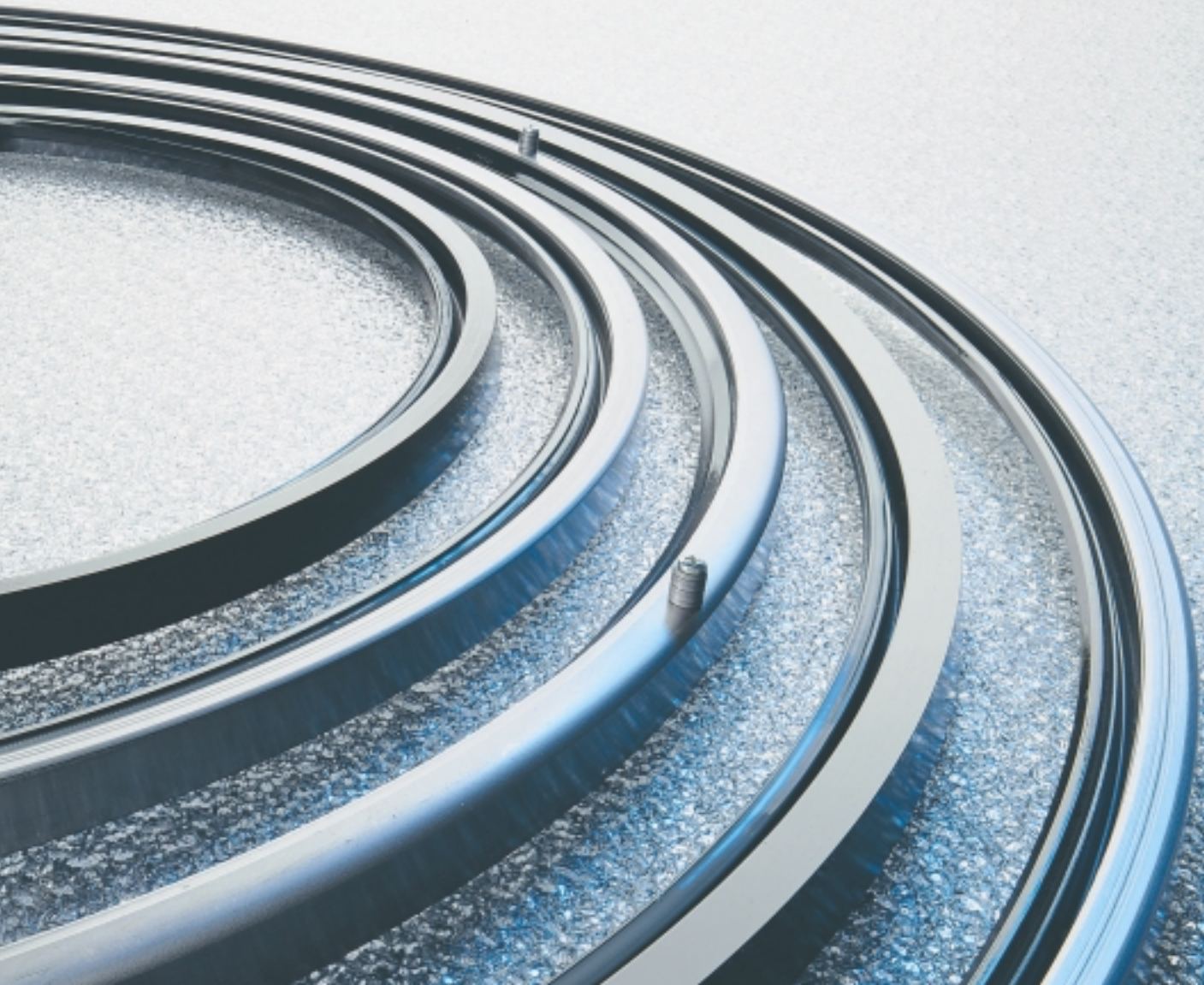

Fig 1

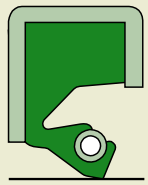

Radial shaft seal of the HDS1 design

Fig 2

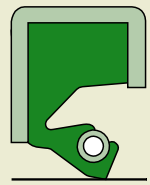

Radial shaft seal of the HDS2 design

Fig 3

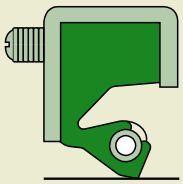

Radial shaft seal with spacer lugs, HDS3 design

Fig 4

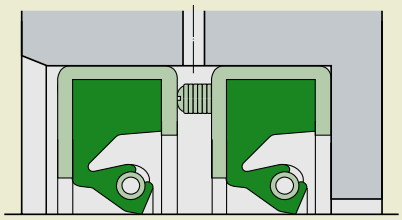

HDS design radial shaft seals mounted adjacent to each other

CR shaft repair sleeves

The design and finish of the counterface (the surface on which the sealing lip runs) are very important for the correct performance of shaft seals. Where possible the counterface should be hardened and finished. Excessive lip pressure and the presence of solid contaminants have a negative influence on sealing efficiency and may lead to tracks being worn in the counterface. In such cases it is not sufficient just to replace the seal to restore sealing efficiency. The counterface must be reworked and this is generally expensive and time-consuming.

Where repairs to the counterface are necessary CR shaft repair sleeves (➔ **fig** 5) are the ideal solution. They are simply pressed on to the shaft and provide a new counterface. The sleeves for shaft diameters of 200 to 1 250 mm have a wall thickness of 2,4 mm and are made of high quality hot rolled steel with a hardness of 96 HRB. The counterface for the seal is finely finished and chromium plated to enhance its resistance to wear and corrosion. The sleeves are available either with a flange, the LDSLV3 design, or without a flange, the LDSLV4 design. There are two alternative ways of using these LDSLV sleeves. The first is simply to push the sleeve into position over the damaged counterface and to use a seal which has a 4,8 mm larger bore diameter than the original (➔ **fig** 6). The second is to machine down the diameter of the worn counterface by 4,8 mm and use the same size of seal as the original (➔ **fig** 6). In cases where seal wear and damage to the counterface can be expected it is recommended that an LDSLV sleeve is incorporated into the original design. It is not then necessary to rework and one and the same seal size can be used throughout.

More information on these shaft repair sleeves will be found in the SKF catalogue “CR seals” or the “SKF Interactive Engineering Catalogue” on CD-ROM or online at www.skf.com.

CR shaft repair sleeve with flange, LDSLV3 design, and without flange, LDSLV 4 design

Fig 5

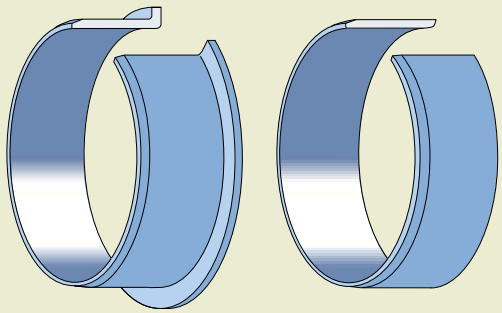

Alternative ways to repair shafts using LDSLV sleeves

Fig 6

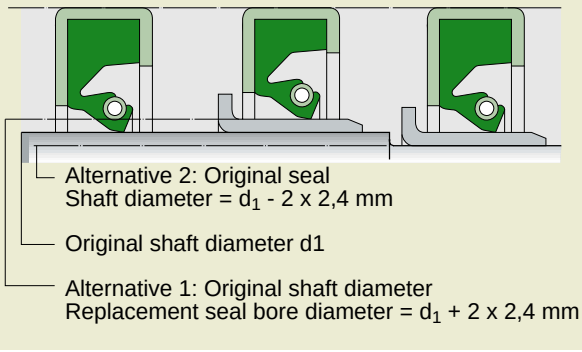

SKF lubricating greases

In the vast majority of applications, SKF four-row taper roller bearings are lubricated with grease. For the open and sealed bearings on work rolls it is recommended to use the SKF grease LGHB 2, see specification below. The grease is a high quality calcium sulphonate complex grease. The base oil is a mineral oil. The special characteristics of this grease are its

- excellent lubricating properties even under heavy loads,
- friction-reducing and anti-wear properties,
- extremely good mechanical stability,
- very good resistance to water, and
- extremely good corrosion inhibiting properties.

The development of SKF lubricating greases has been based on extensive research efforts, testing and practical experience and has been undertaken specifically with bearing lubrication in mind. The strict specifications are designed to allow long bearing life.

This means that the user can be assured of obtaining the best bearing greases of consistently high quality from SKF worldwide. It also means products, which are environmentally favourable as for the most part toxic heavy metal compounds have been replaced.

Consistency, NLGI Scale		2
Soap base		complex calcium sulphonate
Colour		brown
Base oil		mineral oil
Temperature range		
°C		–20 to +150
Dropping point (ISO 2176)		
°C		min. 220
Base oil viscosity		
at 40 °C, mm^2/s		400 to 450
at 100 °C, mm^2/s		26,5
Penetration (ISO 2137)		
60 strokes, 10^{-1} mm		265 to 295
difference after 100 000 strokes, 10^{-1} mm		–20 to +50 (max. 325)
Roll stability		
72 h at 100 °C (DIN 51804), 10^{-1} mm		–20 to +50 (change)
Corrosion protection		
SKF Emcor test	standard ISO 11007	0-0
	water wash-out test	0-0
	salt water test	0-0
Water resistance		
DIN 51 807/1, 3 h at 90 °C		max. 1
Oil separation		
DIN 51 817, 7 days at 40 °C, static, %		1 to 3
Copper corrosion		
DIN 51 811, 100 °C		max. 2
EP performance		
4-ball test, welding load (DIN 51 350/4), N		min. 3 000

SKF lubricating grease LGHB 2: Technical data

For full information on SKF greases please refer to the SKF catalogue "SKF Maintenance and Lubrication Products" which will be sent on request.


SKF
SKF
LGHQ 3/180
LGEV 2/50
LGEP 2/18
- High load -
GREASE
LGEV 2/5
LGMT 2/5
LGGB 2/5
LGEM 2/5
LGMT 3/1
LGLT 2/1
LGWM 1/5
LGMA 2/1
LGMT 2/1

SKF – The knowledge engineering company

The business of the SKF Group consists of the design, manufacture and marketing of the world's leading brand of rolling bearings, with a global leadership position in complementary products such as radial seals. SKF also holds an increasingly important position in the market for linear motion products, high precision aerospace bearings, machine tool spindles, plant maintenance services and is an established producer of high-quality bearing steel.

The SKF Group maintains specialized businesses to meet the needs of the global marketplace. SKF supports specific market segments with ongoing research and development efforts that have led to a growing number of innovations, new standards and new products.

SKF Group has global ISO 14001 environmental certification. Individual divisions have been approved for quality certification in accordance with either ISO 9000 or appropriate industry specific standards.

Some 80 manufacturing sites worldwide and sales companies in 70 countries make SKF a truly international corporation. In addition, our 7 000 distributor and dealer partners around the world, e-business marketplace and global distribution system put SKF close to customers for the supply of both products and services. In essence, SKF solutions are available wherever and whenever our customers need them.

Overall, the SKF brand now stands for more than ever before. It stands for the knowledge engineering company ready to serve you with world-class product competences, intellectual resources and the vision to help you succeed.



Harnessing wind power
The growing industry of wind-generated electric power provides an environmentally compatible source of electricity. SKF is working closely with global industry leaders to develop efficient and trouble-free turbines, using SKF knowledge to provide highly specialized bearings and condition monitoring systems to extend equipment life in the extreme and often remote environments of wind farms.

Developing a cleaner cleaner
The electric motor and its bearings are the heart of many household appliances. SKF works closely with appliance manufacturers to improve their product's performance, cut costs and reduce weight. A recent



example produced a new generation of vacuum cleaners with substantially more suction. SKF's knowledge in small bearing technology is also applied to manufacturers of power tools and office equipment.



Delivering asset efficiency optimization
To optimize efficiency and boost productivity, many industrial facilities outsource some or all of their maintenance services to SKF, often with guaranteed performance contracts. Through the specialized capabilities and knowledge available from SKF Reliability Systems, SKF provides a comprehensive range of asset efficiency services, from maintenance strategies and engineering assistance, to operator-driven reliability and machine maintenance programs.



Creating a new "cold remedy"
In the frigid winters of northern China, sub-zero temperatures can cause rail car wheel assemblies and their bearings to seize due to lubrication starvation. SKF created a new family of synthetic lubricants formulated to retain their lubrication viscosity even at these extreme bearing temperatures. SKF's knowledge of lubricants and friction are unmatched through out the world.





Planning for sustainable growth
By their very nature, bearings make a positive contribution to the natural environment. Reduced friction enables machinery to operate more efficiently, consume less power and require less lubrication. SKF is continually raising the performance bar, enabling new generations of high-efficiency products and equipment. With an eye to the future, SKF's global policies and manufacturing techniques are planned and implemented to help protect and preserve the earth's limited natural resources. We remain committed to sustainable, environmentally responsible growth.

Evolving by-wire technology
SKF has unique expertize and knowledge in fast growing by-wire technology, from fly-by-wire, to drive-by-wire, to work-by-wire. SKF pioneered practical fly-by-wire technology and is a close working partner with all aerospace industry leaders. As an example, virtually all aircraft of the Airbus design use SKF by-wire systems for cockpit flight control. SKF is also a leader in automotive drive-by-wire, having jointly developed the revolutionary Filo and Novanta concept cars which employ SKF mechatronics for steering and braking. Further by-wire development has led SKF to produce an all-electric forklift truck which uses mechatronics rather than hydraulics for all controls.



Maintaining a 320 km/h R&D lab
In addition to SKF's renowned research and development facilities in Europe and the United States, Formula One car racing provides a unique environment for SKF to push the limits of bearing technology. For over 50 years, SKF products, engineering and knowledge have helped make Scuderia Ferrari a formidable force in F1 racing. (The average racing Ferrari utilizes more than 150 SKF components.) Lessons learned here are applied to the products we provide to automakers and the aftermarket worldwide.

® SKF is a registered trademark of the SKF Group.

© Copyright SKF 2003
The contents of this publication are the copyright of the publisher and may not be reproduced (even extracts) unless permission is granted. Every care has been taken to ensure the accuracy of the information contained in this publication but no liability can be accepted for any loss or damage whether direct, indirect or consequential arising out of the use of the information contained herein.

Publication **5109 E** · August 2003

Printed in Germany on environmentally friendly, chlorine-free paper by Weppert GmbH & Co. KG.

www.skf.com